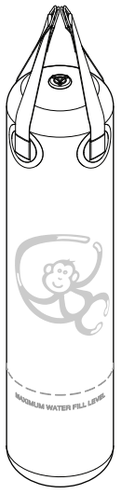

Boxing Bag

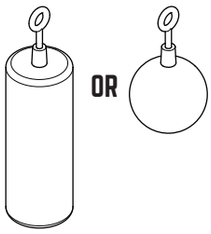

Ninja Grips

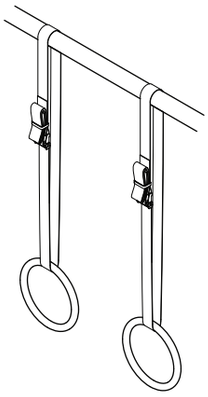

Roman Rings

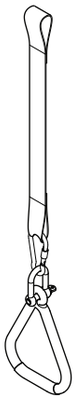

Delta Rings

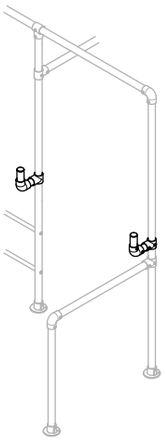

Weight Bar Holder
Add-on

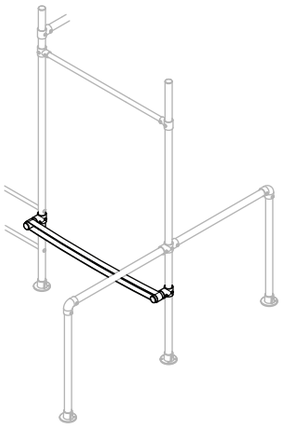

Resistance Bands
Add-on

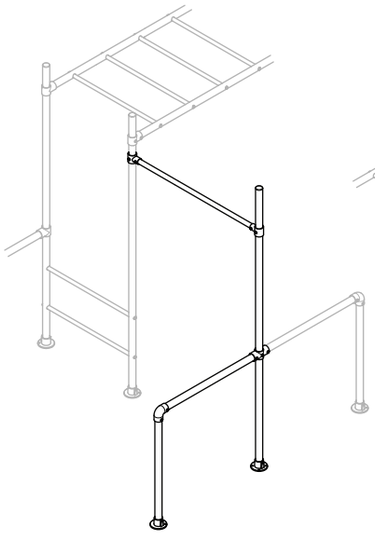

Gym Bar (chin up bar)
Add-on

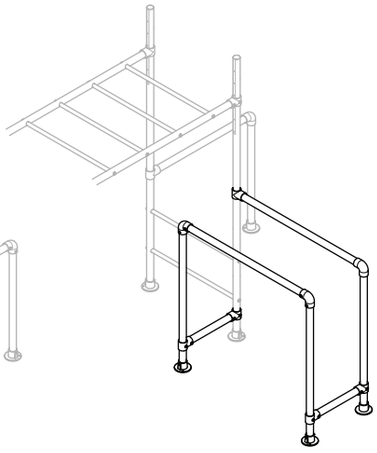

Dip Bar
Add-on

GYM/NINJA ACCESSORIES

ASSEMBLY INSTRUCTIONS

CONTENTS

Warnings . . . . . Page 1
Assembly Tips . . . . . Page 3
Assembly Instructions . . . . . Page 5
Boxing Bag . . . . . Page 5
Ninja Grips- Long & Round. . . . . Page 8
Roman Rings . . . . . Page 13
Delta Rings . . . . . Page 15
Resistance Bands . . . . . Page 17
Weight Bar Holder . . . . . Page 21
Gym Bar (Chin Up Bar) . . . . . Page 25
Dip Bar . . . . . Page 30
Maintenance . . . . . Page 34

WARNING

PLEASE CAREFULLY READ ALL INFORMATION CONTAINED IN THIS ASSEMBLY MANUAL BEFORE YOU INSTALL AND USE YOUR FUNKY MONKEY BARS®.

SAFETY NOTICE

1. Any person handling or using the Funky Monkey Bars® products must follow the instructions as described in this document. The person in charge of assembling and using the equipment must ensure that the recommendations for use given in this document are seen by all users.
2. Only use the Funky Monkey Bars® after they have been fully assembled and after checking that the fittings are tightened properly (*refer to page 3 - Correct Tightening Method*).
3. DO NOT install your Funky Monkey Bars® over concrete, asphalt, packed earth, wood decking or any other hard surface. A fall onto a hard surface can result in serious injury or death.
4. Inspect all grub screws, bolts and nuts at the beginning of each play session to ensure your Funky Monkey Bars® are tight and secure.
5. Ensure all tubes are fully inserted into fittings until you hear the magic “CLUNK” sound.
6. Ensure your Funky Monkey Bars® are properly secure at ALL times. Pegs are in place and inserted fully into the ground.
7. DO NOT exceed the maximum load/weight limit as recommended by Funky Monkey Bars®.
8. Children should be supervised by an adult at all times.
9. Installing a gym/crash mat under the fall zone area of your Funky Monkey Bars® would be recommended for children learning this new skill. This will reduce the chance of injury and build the child’s confidence while they build strength and master the skill.
10. Ensure you have thoroughly read your assembly and installation instructions and viewed our on-line installation videos at *https://www.funkymonkeybars.com/blogs/installation-maintenance-videos*
11. DO NOT climb, sit or stand on top of the monkey bar (horizontal ladder) section.
12. DO NOT jump from the top of any section of the monkey bar.
13. DO NOT use your Funky Monkey Bars® when wet as the steel will be slippery.
14. DO NOT attach items to your frame that are not designed specifically to be used with Funky Monkey Bars®, especially lower quality products that have not been approved by Funky Monkey Bars®.
15. Ensure the height of your Funky Monkey Bars® (horizontal ladder) are set at a level that is age appropriate.
16. DO NOT install your Funky Monkey Bars® over or near objects that could interfere with users in an unsafe way. Maintain a clear area around your Funky Monkey Bars®.
17. DO NOT use your Funky Monkey Bars® while under the influence of drugs and alcohol.
18. Wear clothing free of drawstrings, hooks, loops or anything that could get caught while using your Funky Monkey Bars® and result in entanglement and/or strangulation.

ASSEMBLY

1. Keep small children away from the Funky Monkey Bars® during assembly.
2. Do not attempt to use the Funky Monkey Bars® until it is completely assembled and every fitting is tight and secured.
3. Installation typically takes 1 hour to complete. Two people are recommended for assembly.
4. Ensure all fittings are tightened to the correct tightening method as described on page 3.
5. Assembly should be carried out on clean, dry, level surface

Please refer to the video section on the Funky Monkey Bars® website for more handy tips and assembly instructions at *http://www.funkymonkeybars.com/pages/videos*

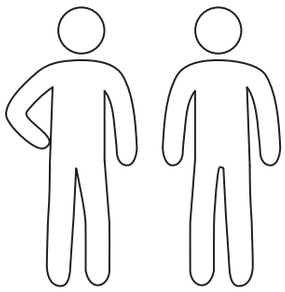

Assembly requires 2 adults.

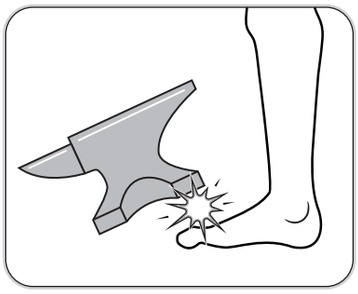

Heavy items !

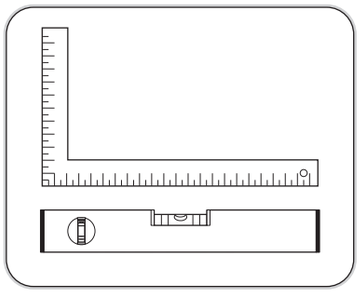

Work on flat level surface.

LOCATION

1. A safe fall zone around your Funky Monkey Bars® is essential. A minimum distance of 1.5m to 2m (5 ft to 6.5ft) is recommended around the elevated hanging points of your Funky Monkey Bars®.
2. Place your Funky Monkey Bars® on level ground, away from any structure or obstruction such as a fence, garage, house, overhanging branches, laundry lines or electrical wires and remove any obstructions beneath your Funky Monkey Bars®.
3. Ensure your Funky Monkey Bars® are positioned away from retaining walls, pool fences, structures and other play equipment. Maintain a clear space around the whole perimeter of your Funky Monkey Bars®.
4. Place your Funky Monkey Bars® on the most level surface available.

MAINTENANCE

1. At the beginning of each heavy play session we recommend the following maintenance processes be performed on your Funky Monkey Bars®:
    - Tighten all bolts, grub screws and applicable hardware (as per page 3)
    - Lubricate all metallic moving parts as per instructions (flying fox, swing hooks etc)
    - Check all protective coverings on bolts, pipes, edges and corners. Replace if they are loose, cracked or missing.
    - Check all moving parts including swing seats, shackels, snap hooks, chains and trolleys for wear, rust, or other deterioration. Replace as needed.

2. Twice a month during play season we would recommend the following maintenance processes be performed on your Funky Monkey Bars®:
    - Tighten all connections and hardware
    - Check all protective coverings on bolts, pipes, edges and corners. Replace if they are loose, cracked or missing.

3. Once a month during play season we would recommend the following maintenance processes be performed on your Funky Monkey Bars®:
    - Lubricate all metallic moving parts as per instructions (flying fox, swing hooks etc). If swings start to squeek then lubricate swing hooks.
    - Check all moving parts including swing seats, ropes, chains and trolleys for wear, rust, or other deterioration. Replace as needed.
    - Owners shall be responsible for maintaining the legibility of any warning labels.

For additional information concerning your Funky Monkey Bars®, please contact our customer service team or check our website for any important updates. Phone -1300 912 198 or www.funkymonkeybars.com

CORRECT TIGHTENING OF SWING HOOKS - (INDICATIVE DIAGRAM SHOWN)

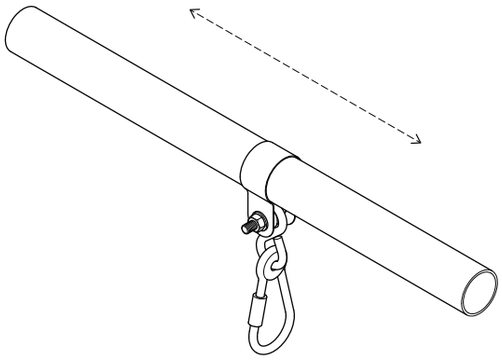

1. Slide the swing hook along the tube until the desired location.

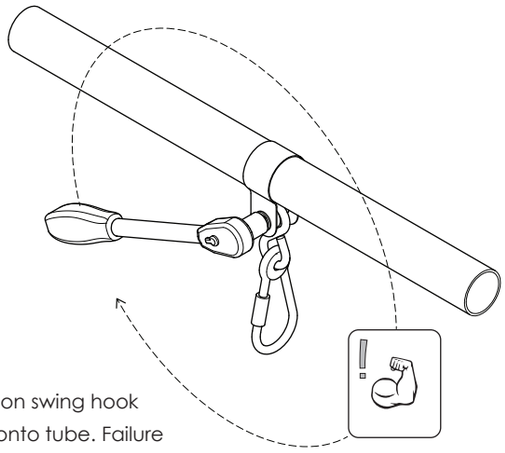

2. Fully tighten bolt on swing hook to clamp tightly onto tube. Failure to do so can result in **serious injury.**

CORRECT INSERTION INTO FITTINGS - (INDICATIVE DIAGRAM SHOWN)

All tubes must be fully inserted until contact is made with adjoining tube.

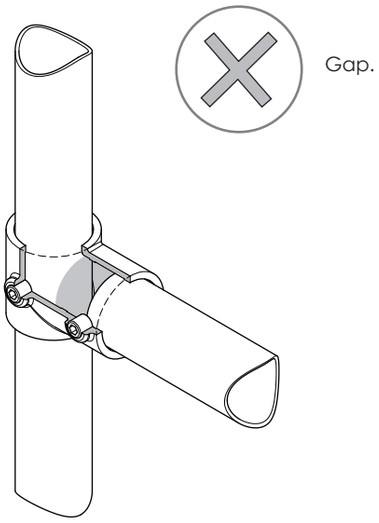

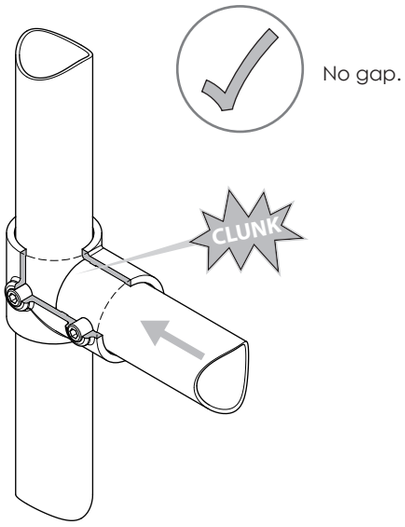

CORRECT TIGHTENING METHOD OF GRUB SCREWS - (INDICATIVE DIAGRAM SHOWN)

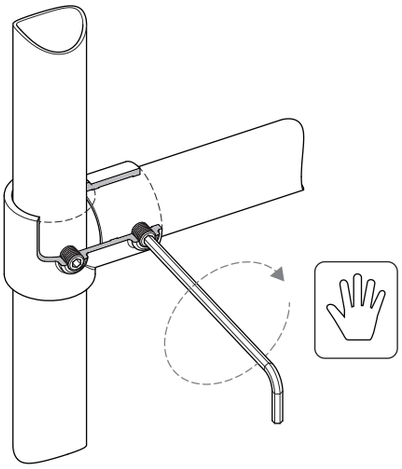

1. With long end of allen key, hand tighten grub screw as much as possible.

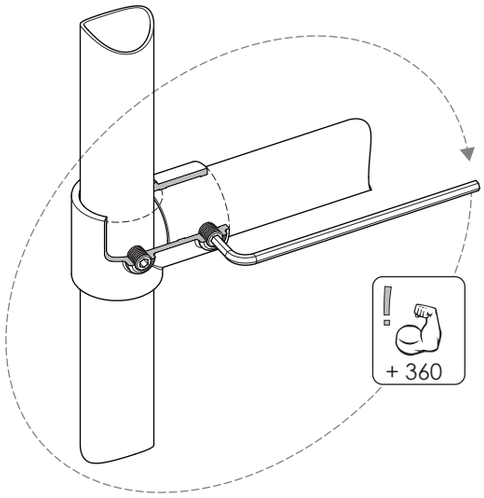

2. Using other end of the allen key do one full 360 degree turn as a minimum, use muscles!

TOOLS REQUIRED FOR INSTALLATION - (VARIES FOR EACH ACCESSORY)

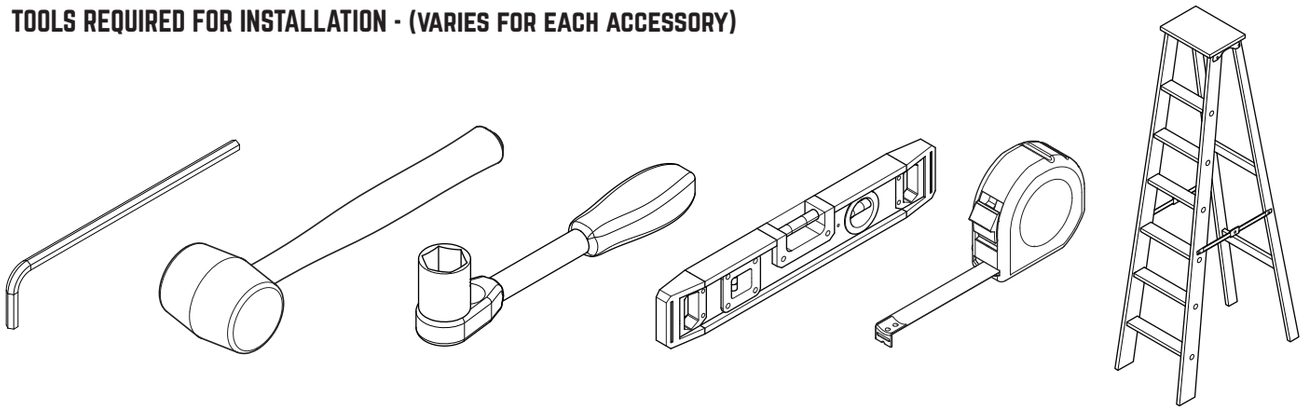

1x 8mm Allen key (Included with frame)	**1x** Soft Hammer (Not included)	**1x** 17mm Rachet (Not included)	**1x** Spirit Level (Not included)	**1x** Tape Measure (Not included)	**1x** 3m Step Ladder (Not included)

IT IS CRITICAL YOUR MAIN FRAME IS 100% SQUARE AND LEVEL (INDICATIVE DIAGRAM SHOWN)

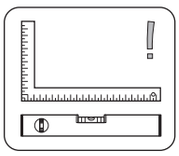

Check assembly is 100% level, square & straight.

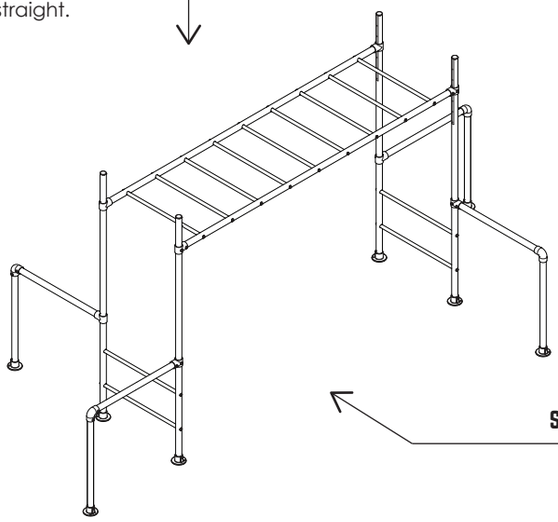

PLAN VIEW

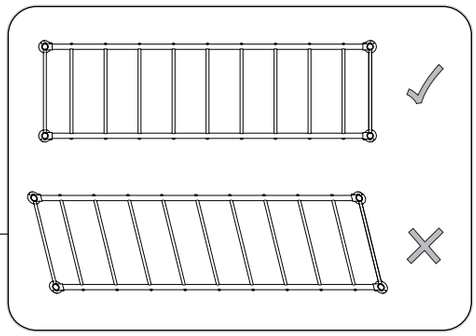

SIDE VIEW

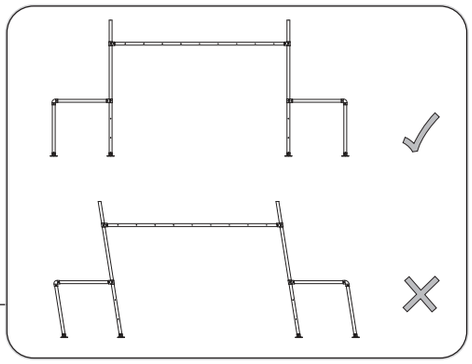

If your frame is not straight or level remove pegs, loosen grub screws, re-adjust re-tighten and re-peg the frame.

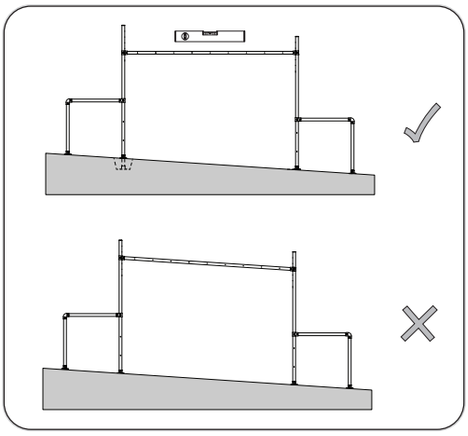

INSTALLATION ON A SLOPE

If your frame is being installed on a slope ensure the monkey ladder bar is level. Either install at different heights on the legs or dig down at one end until level.

1 CHECK INVENTORY - (NOT TO SCALE)

Check that you have the following items before assembling your Funky Monkey Bars® boxing bag.

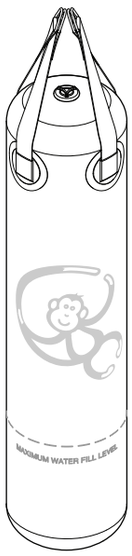

1x
Boxing Bag

1x
Swing Hook

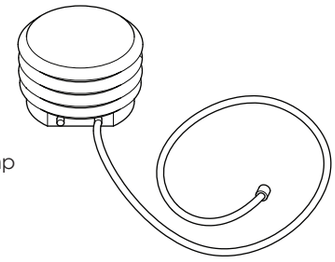

1x
Hand Air Pump

2 INSTALL SWING HOOK AND TIGHTEN BOLT

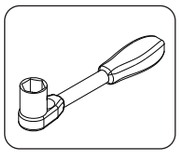

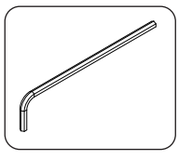

1. Select suitable location for boxing bag.
2. Loosen any neccessary fittings and slide swing hook onto tube into desired position.
3. Fully retighten any loosened fittings
4. Fully tighten swing hook bolt.

FAILURE TO DO SO COULD RESULT IN SERIOUS INJURY OR DEATH.

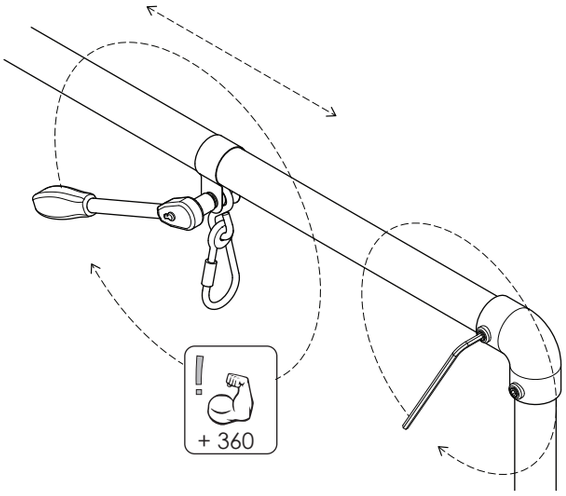

3 HANG BOXING BAG

Lift empty bag and slot hanging rings into open shackle.

Ensure shackle is fully closed-
Mind your fingers!

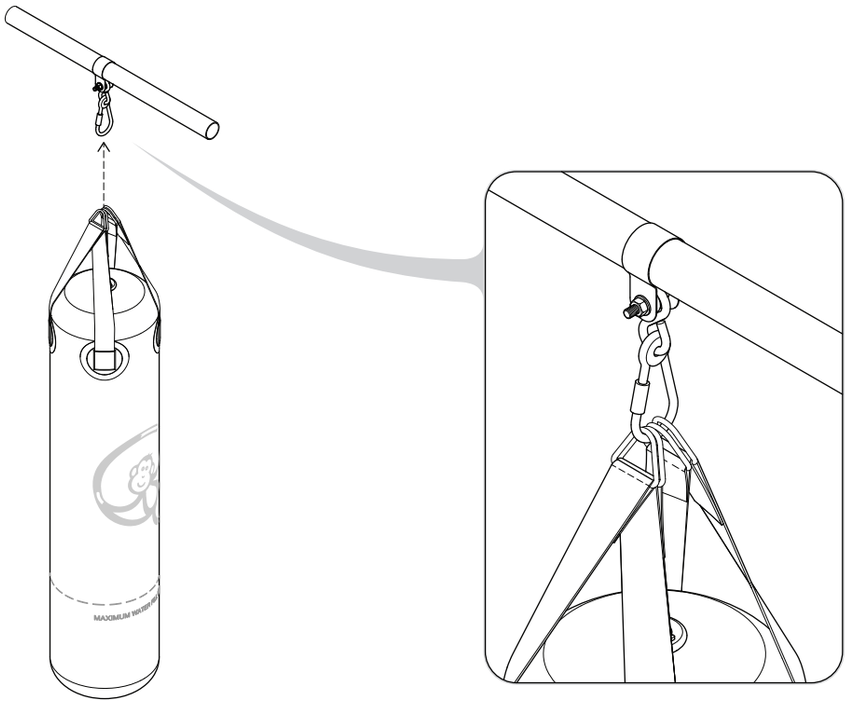

4 UNSCREW VALVE CAP

Unscrew valve cap located on top of boxing bag.

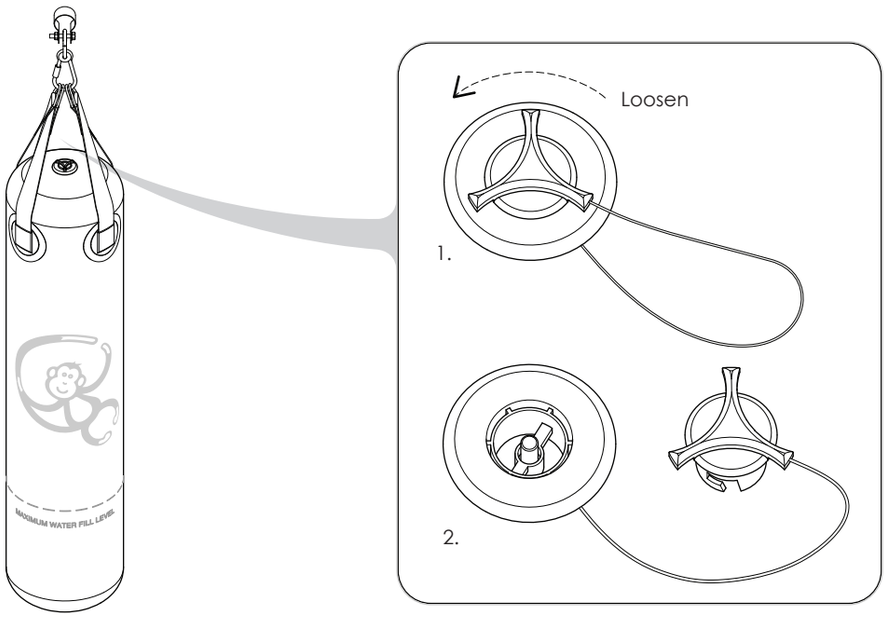

5 OPEN SPRING VALVE

Press down on spring valve to engage open position.

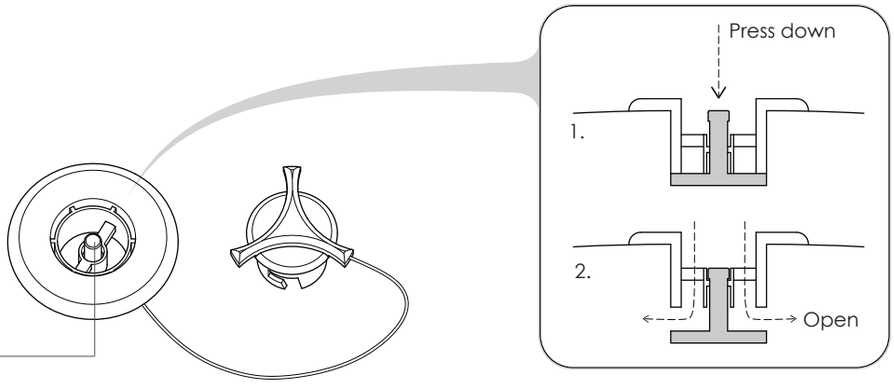

6 FILL BAG WITH WATER TILL LINE

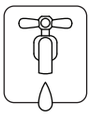

Fill the boxing bag with water to the indicated-
MAXIMUM WATER FILL LEVEL.

7 CLOSE SPRING VALVE

Press down again on spring valve to pop the valve back up into the closed position.

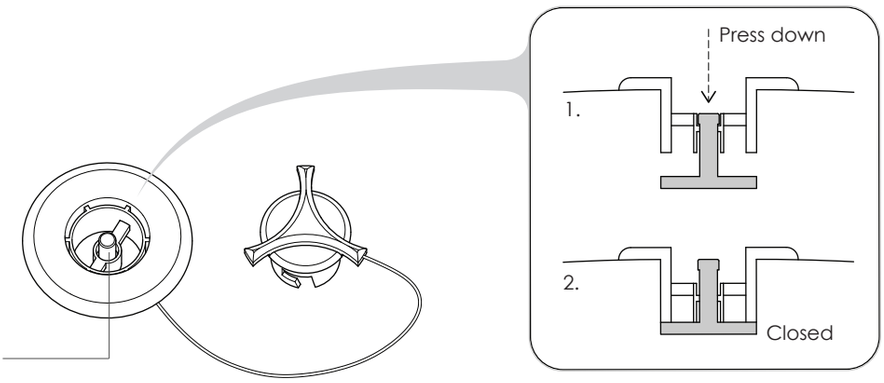

8 INFLATE BOXING BAG

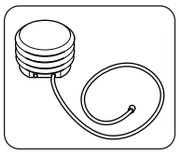

Connect air pump to valve and inflate boxing bag to desired pressure.

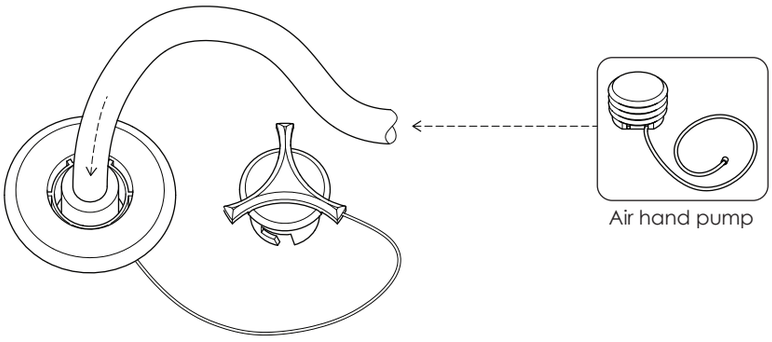

9 TIGHTEN VALVE CAP

1. Remove air pump
2. Screw valve cap located on top of boxing bag back into place

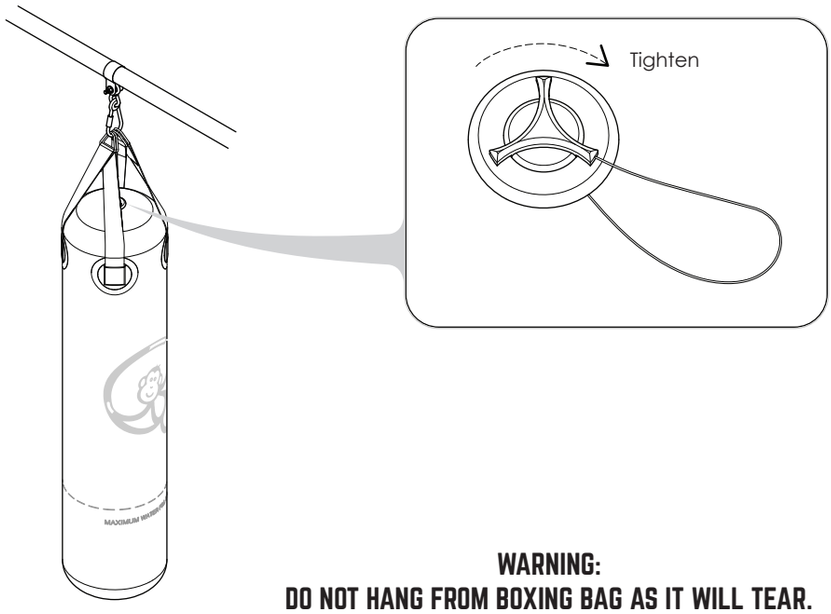

WARNING:
DO NOT HANG FROM BOXING BAG AS IT WILL TEAR.

10 FINAL CHECKS

1. Ensure all swing hook bolts are firmly tightened.
2. Check that all other grub screws and rung bolts on your frame are fully tightened.
3. The entire Funky Monkey Bars® frame is pegged down.

Please refer to the maintenance steps at the back of the booklet.

1 CHECK INVENTORY - (NOT TO SCALE)

Check that you have the following
items before assembling your
Funky Monkey Bars® round or long ninja grips package.

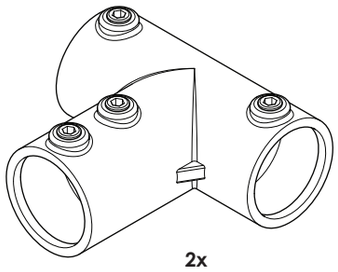

2x
Extra Long Tee
D-104L

4x
Swing Hook

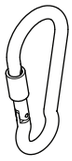

4x
Carabiner
Shackle

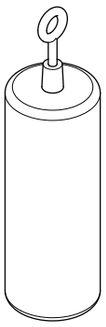

OR

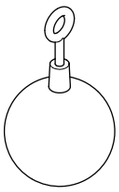

4x
Ninja Grips either
Long or Round

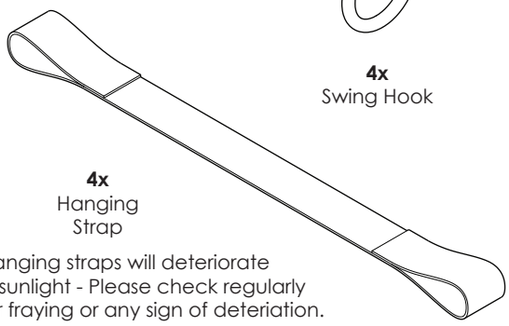

4x
Hanging
Strap

NOTE : Hanging straps will deteriorate
in sunlight - Please check regularly
for fraying or any sign of deteriation.

1x
Load Rating Sticker

1x
Accessories Tube
50Dia x 2950mm

2 SELECT DESIRED ORIENTATION OF NINJA GRIPS (A, B OR C)

(Assembly for basic gorilla shown in example)

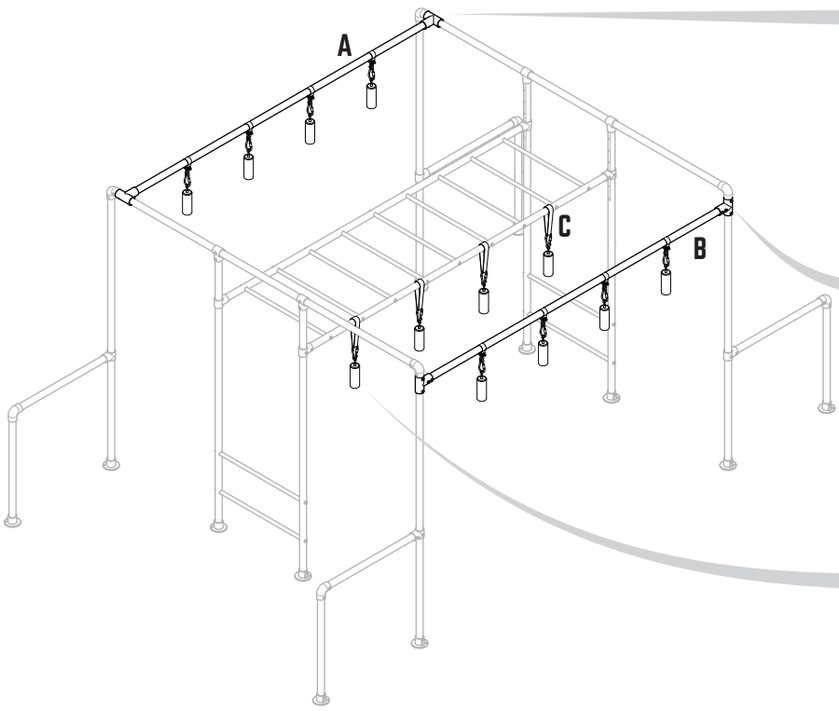

POSITION A.

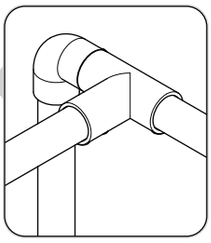

Accessories Bar
located on top
(swing bar).

Used if extra
height is required.

POSITION B.

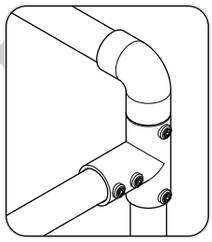

Accessories Bar located
on side (swing leg).

POSITION C.

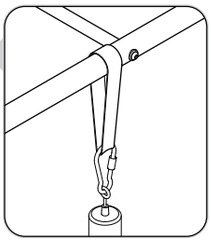

No accessories bar
Straps and shackles
used on monkey bar.

NOTE: All arrangements can be positioned on any chosen side.

3 POSITION C - (USING HANGING STRAPS)

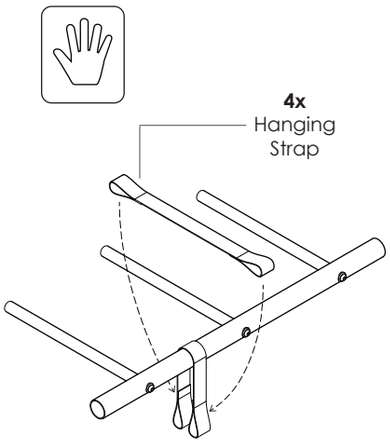

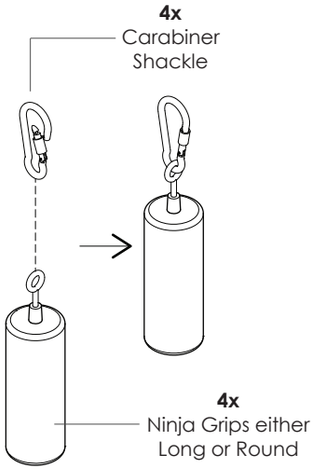

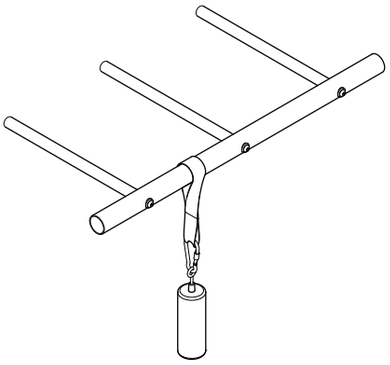

1. Evenly space straps along monkey bar ladder.
2. Open carabiner shackle attach round or long grips.
3. Feed both strap hoops into the shackle then lock shackle. (check straps regularly)

4 POSITION A & B - (USING ACCESSORIES BAR)

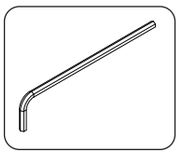

Remove pegs from base plates on selected accessories bar side. Loosen elbow grub screws connecting swing legs to swing bar.

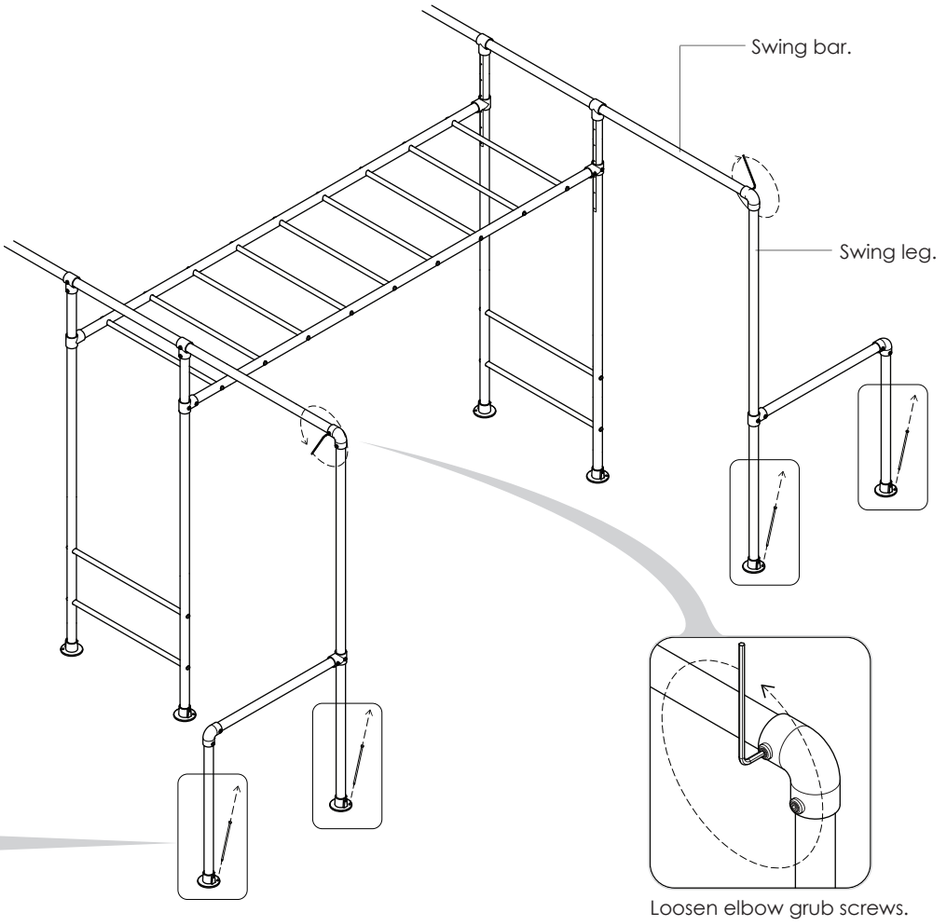

5 LOWER LEGS TO GROUND - REMOVE ELBOW

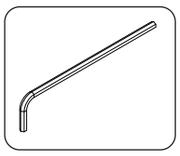

1. Lower leg assemblies to the ground.
2. Remove elbows (Position B only)

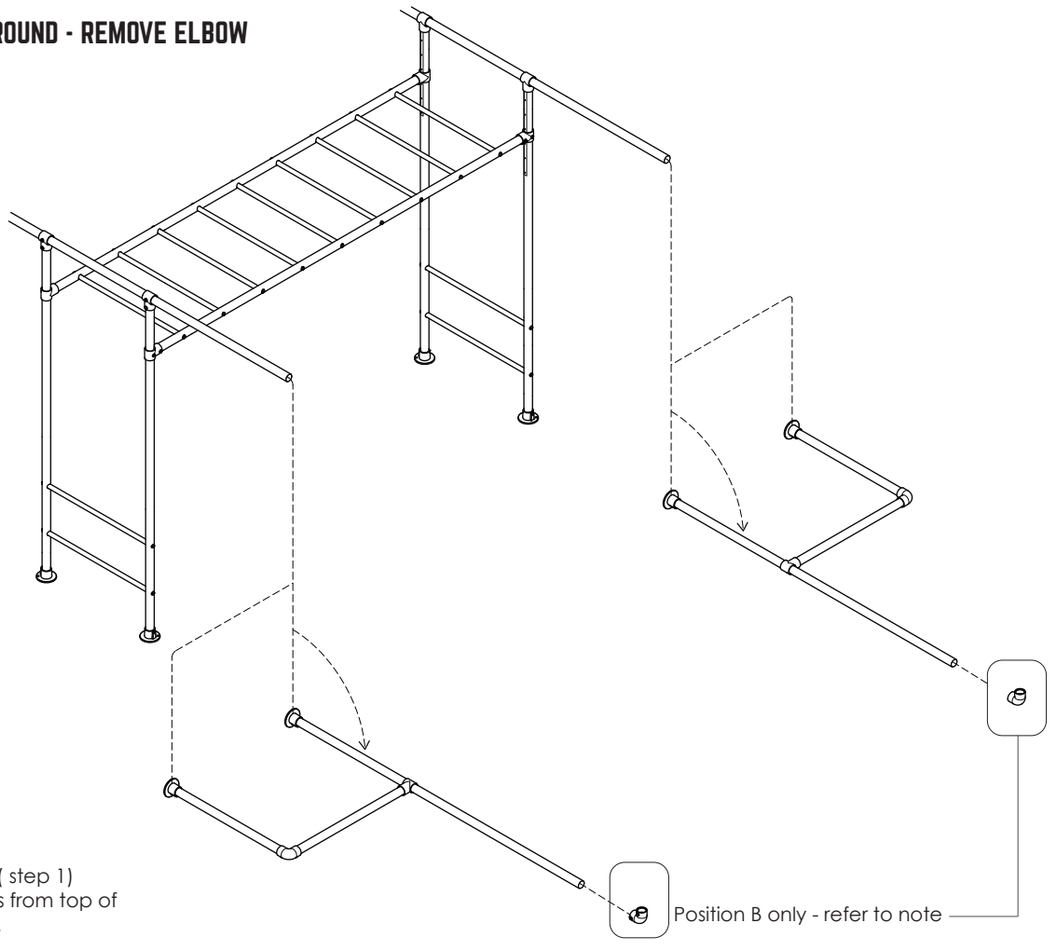

NOTE:
For selected position A (step 1)
DO NOT remove elbows from top of lowered leg assemblies.

6 ASSEMBLE ACCESSORIES BAR

1. On flat level ground slide and evenly space swing hooks along accessory tubes, fully tighten swing hook bolts.
2. Slide extra long tees onto ends as per detail and fully tighten all grub screws.

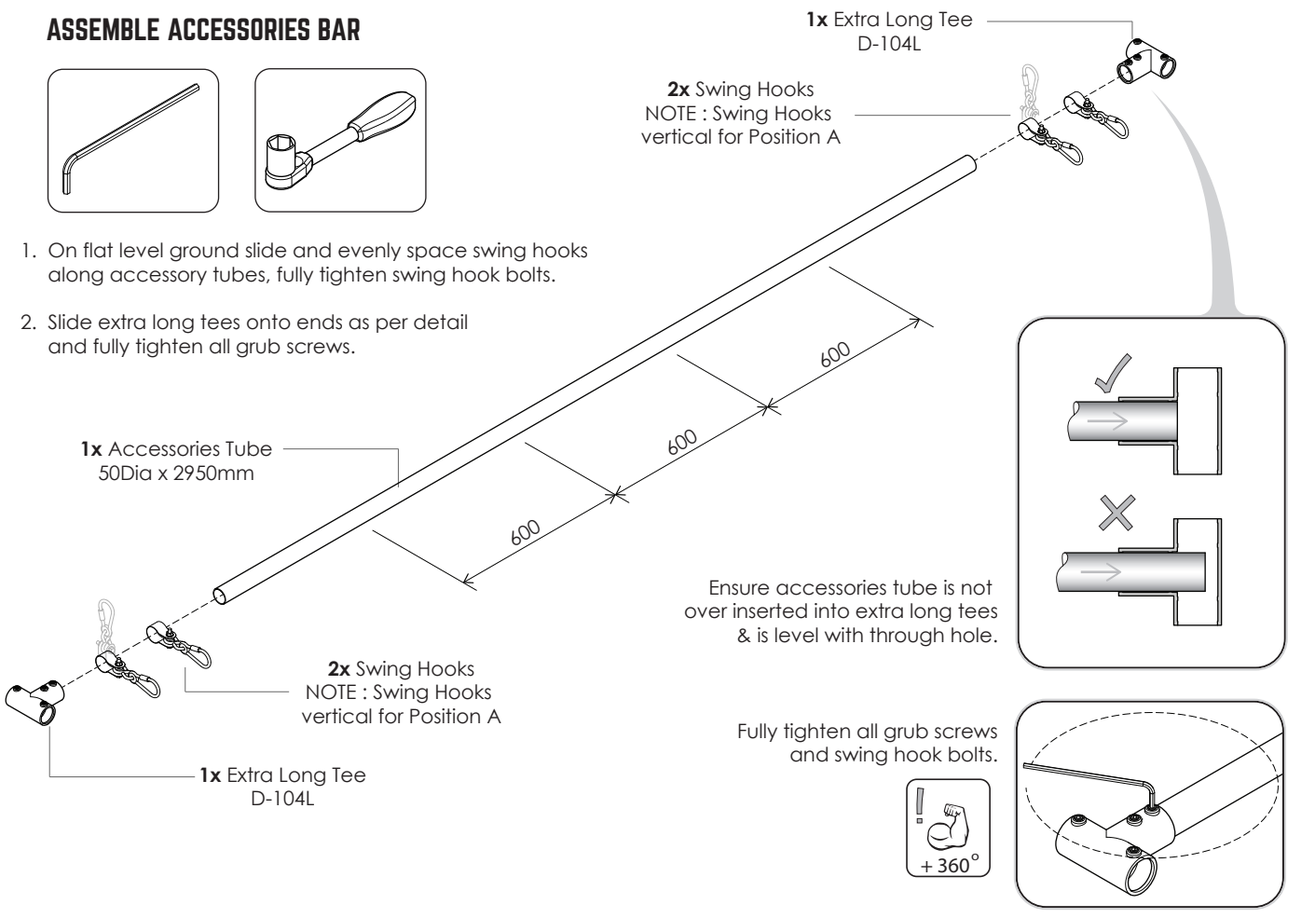

7 ATTACH ACCESSORIES BAR

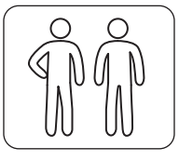

Flip assembled accessory bar over 180° so that extra long tee grub screws are facing downwards.

With 2 people carefully slide the accessories bar onto the open ended swing bars for Position A or on the ends of the lowered legs for Position B.

Reinstall elbows on top of lowered legs for Position B.

Tighten all grub screws.

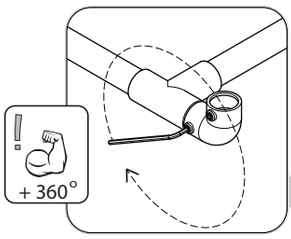

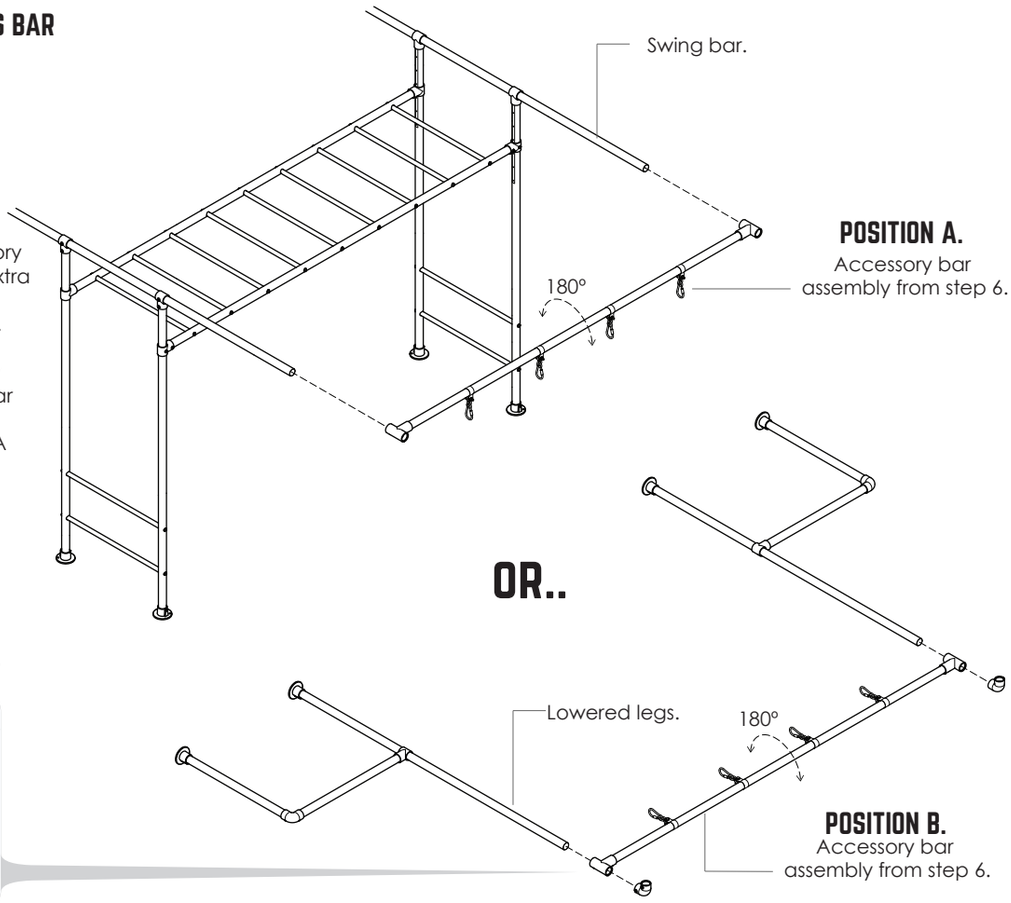

8 RE-ATTACH SWING BAR LEGS

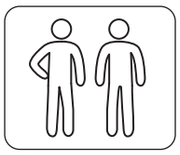

Lift legs and twirly whirly bars back into position.

Fully tighten grub screws on swing leg elbows. Check accessories bar is in desired position,then fully tighten all grub screws.

POSITION A.

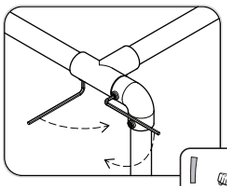

POSITION B.

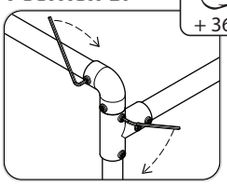

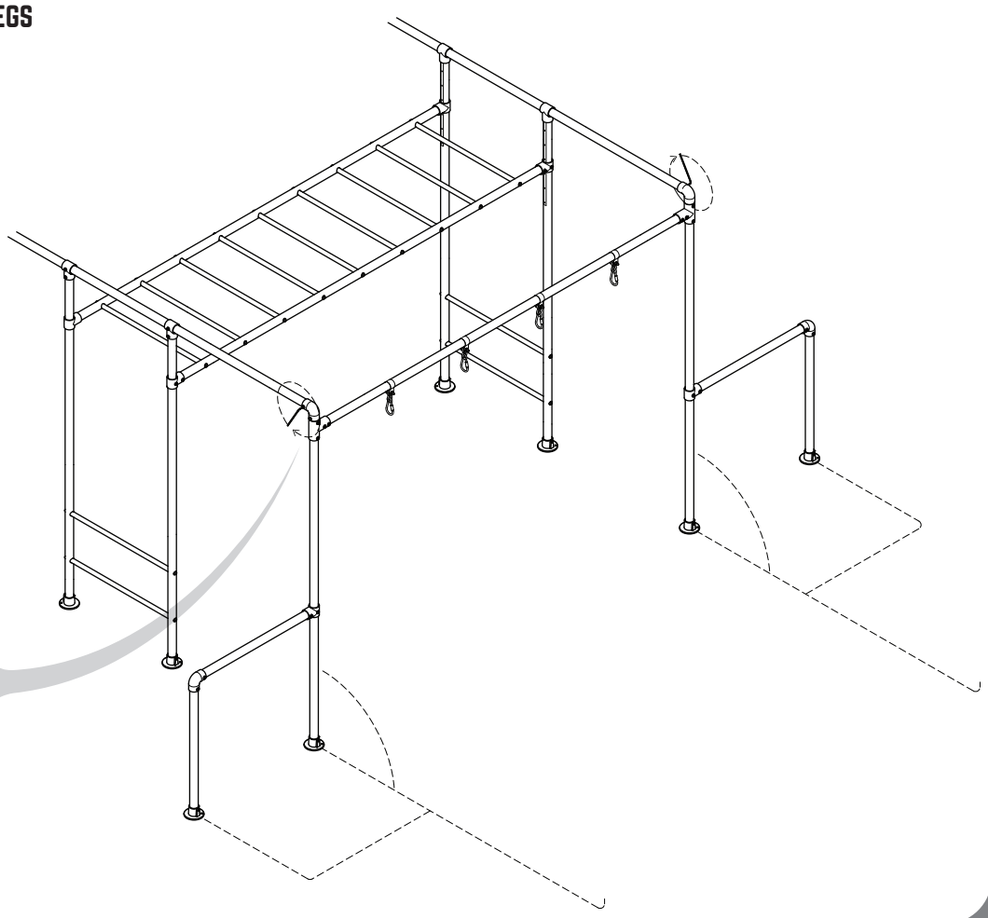

9 SECURE TO GROUND

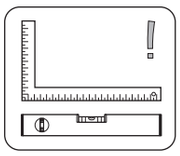

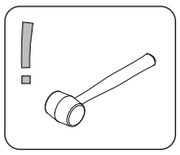

1. Check level and square.
2. Hammer in all removed pegs.

Hammer in pegs.

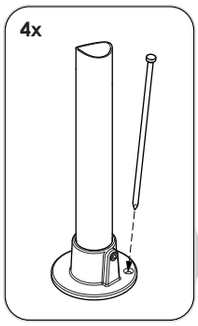

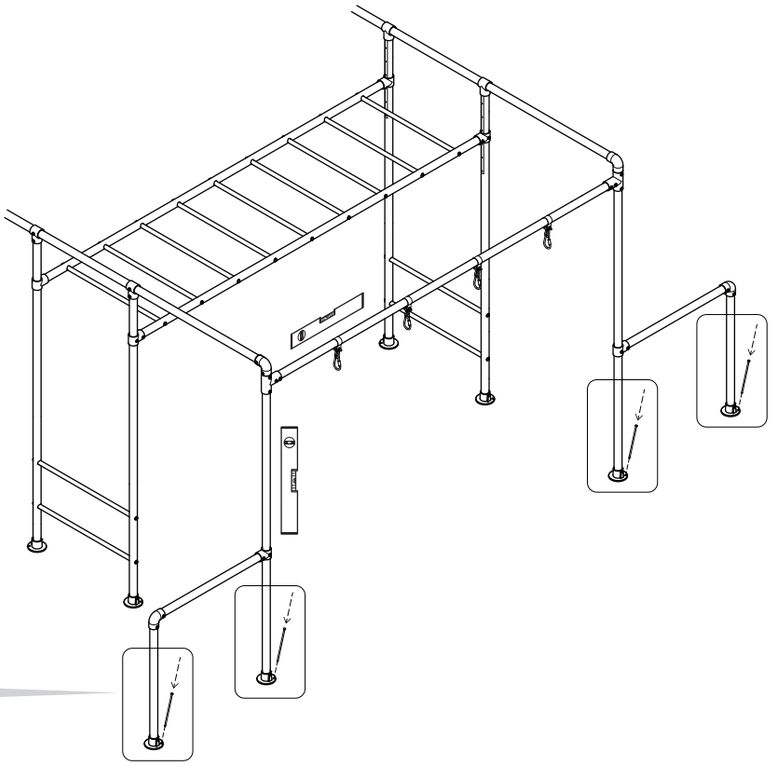

10 HANG NINJA GRIPS-(LONG OR ROUND)

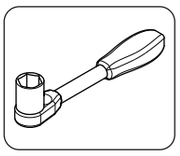

1. Ensure swing hook bolts are fully tightened. Failure to do so can result in **serious injury.**
2. Slot ninja grips into opened shackle.
3. Ensure shackle is fully closed. Mind your fingers!
4. Place load rating sticker onto accessories bar.

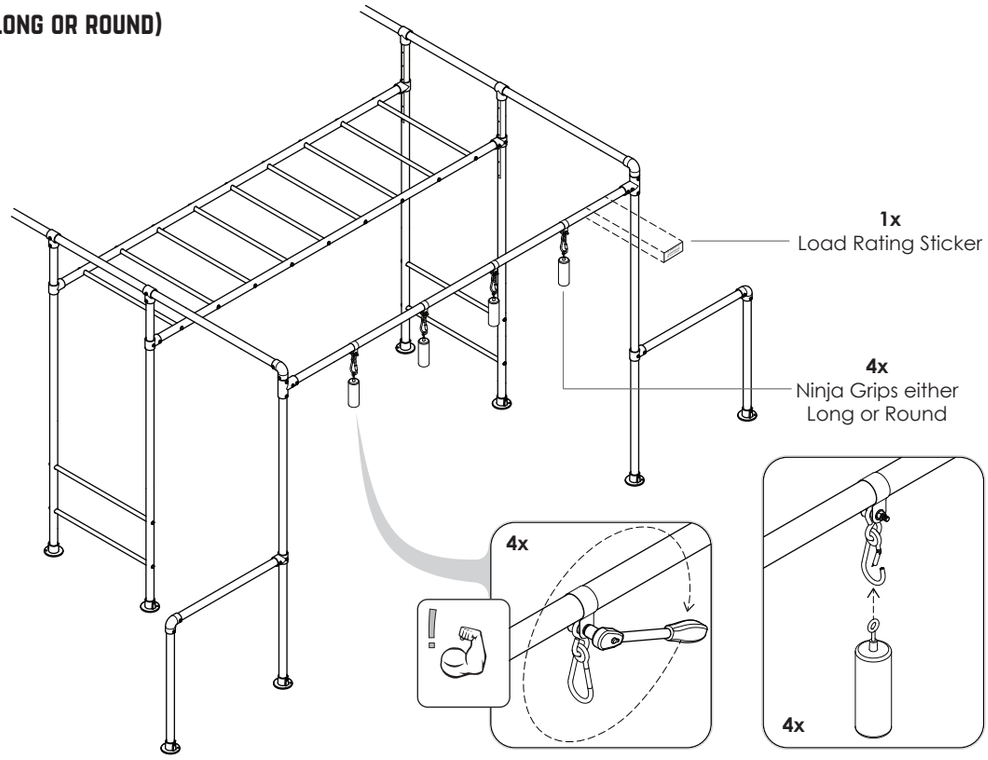

10 FINAL CHECKS

1. Ensure all swing hook bolts are firmly tightened.
2. Check that all other grub screws and rung bolts on your frame are fully tightened.
3. The entire Funky Monkey Bars® frame is pegged down.
4. Place Load Rating sticker onto accessories bar .
5. Load Twirly Whirly bars - see frame assembly instructions or website http://www.funkymonkeybars.com/pages/videos

NOTE: When Ninja grips are NOT in use, bring indoors to prolong life of this product.
Please refer to the additional maintenance steps at the back of the booklet.

1 CHECK INVENTORY - (NOT TO SCALE)

Check that you have the following items before assembling your Funky Monkey Bars® Roman rings.

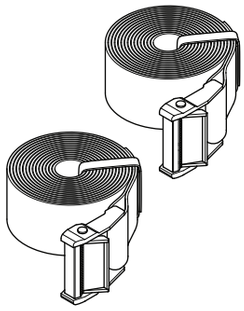

2x
Adjustable Hanging Straps with Carabiner Buckle

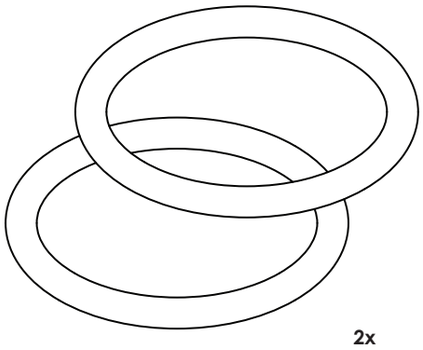

2x
Roman Rings

2 SELECT DESIRED LOCATION OF ROMAN RINGS

Choose a location on your Funky Monkey Bars® frame that is clear from other accessories and cental between legs.

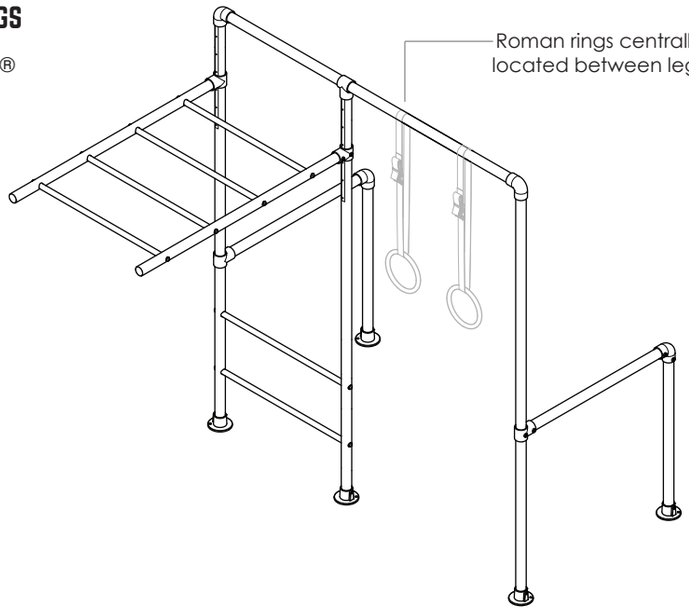

3 HANG ROMAN RINGS STRAPS

Hang straps over the swing bar and ensure buckle clamp lever is facing outwards.

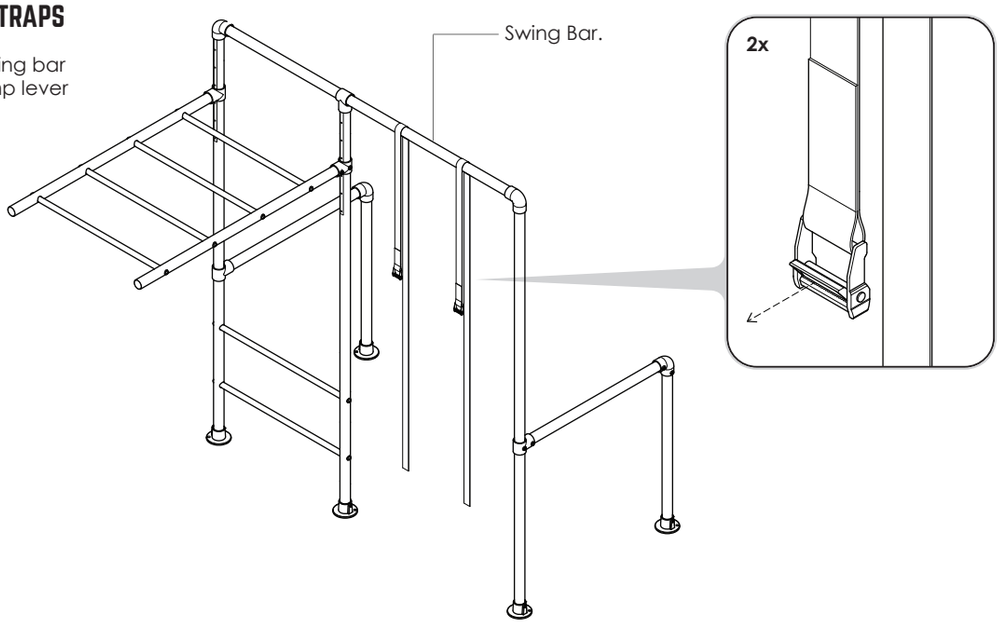

4 THREAD STRAPS THROUGH RINGS

Thread straps through roman rings one at a time.

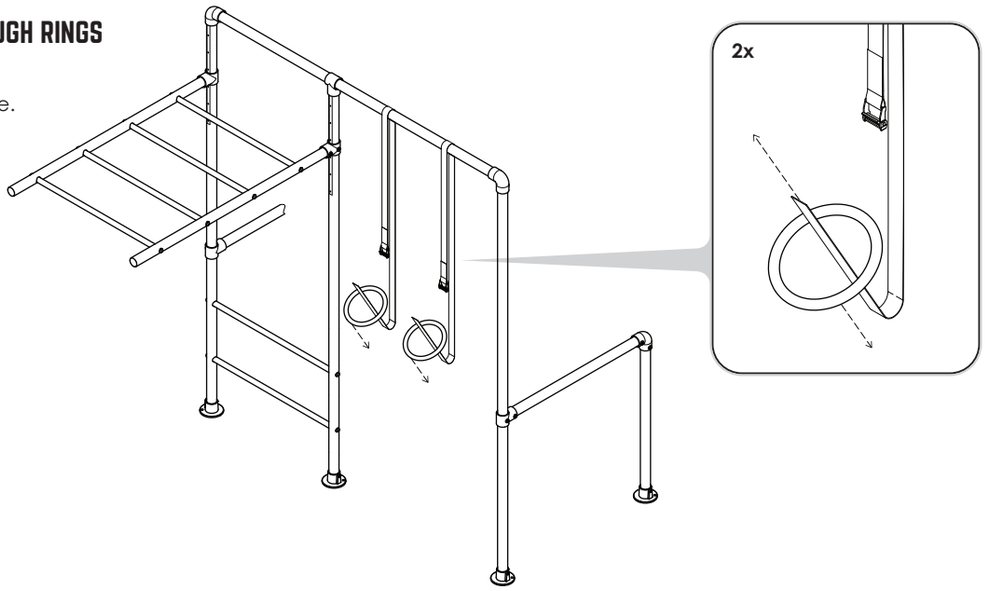

5 FEED STRAPS THROUGH BUCKLE

Push the buckle lever open then feed the straps through the back of the buckle.

Pull the strap through until the roman rings are at the desired height.

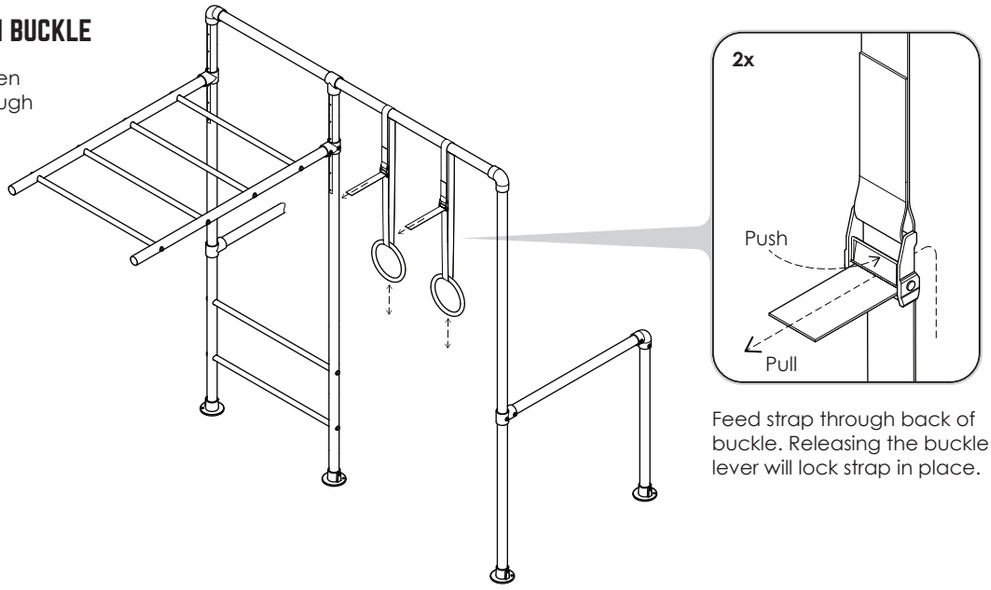

Feed strap through back of buckle. Releasing the buckle lever will lock strap in place.

6 SECURE EXCESS STRAP

Roll up all excess strap.

Using the supplied velcro ties fix the excess strap to above the buckle. This will protect the user from making any contact with the buckle.

Rotate the strap so that the buckle arrangement is away from the roman rings.

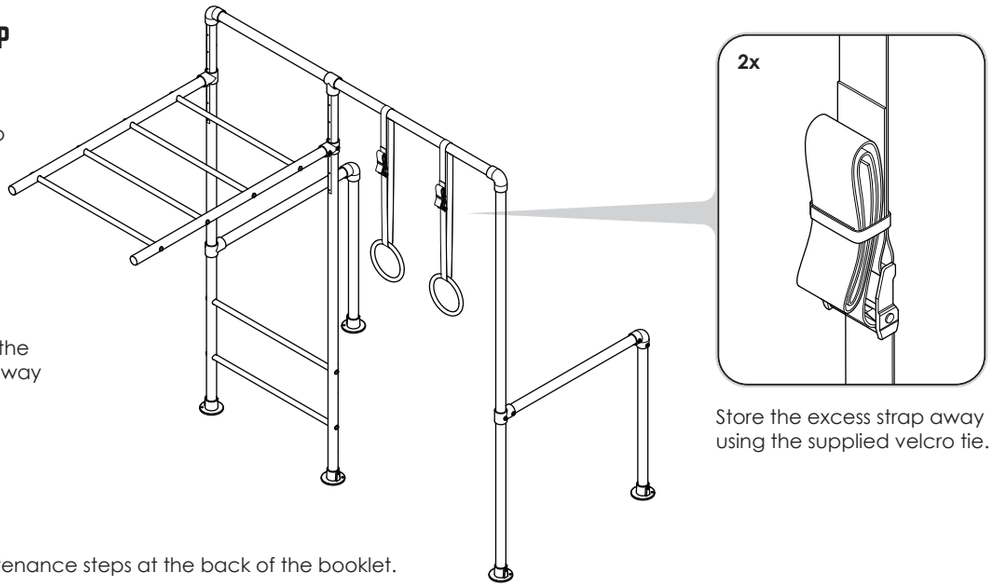

Store the excess strap away using the supplied velcro tie.

7 ENJOY

Please refer to the maintenance steps at the back of the booklet.

1 CHECK INVENTORY - (NOT TO SCALE)

Check that you have the following items before assembling your Funky Monkey Bars® Delta rings.

NOTE : Hanging straps will deteriorate in sunlight - Please check regularly for fraying or any sign of deteriation.

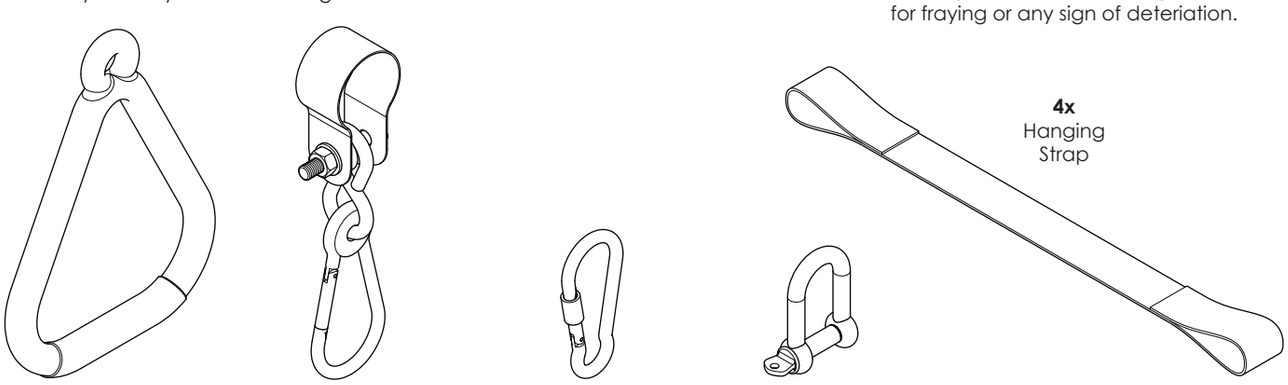

4x Delta Ring

4x Swing Hook

4x Carabiner Shackle

4x D - Shackle

4x Hanging Strap

2 INSTALL SWING HOOKS AND TIGHTEN BOLTS

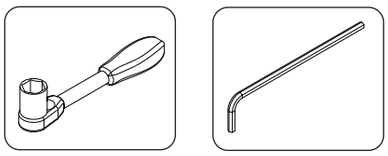

1. If swing hooks are not already positioned on an accessories bar attach now.
2. Loosen any neccessary fittings and slide swing hooks onto tube into desired equally spaced position.
3. Fully retighten any loosened fittings
4. Fully tighten swing hook bolts.

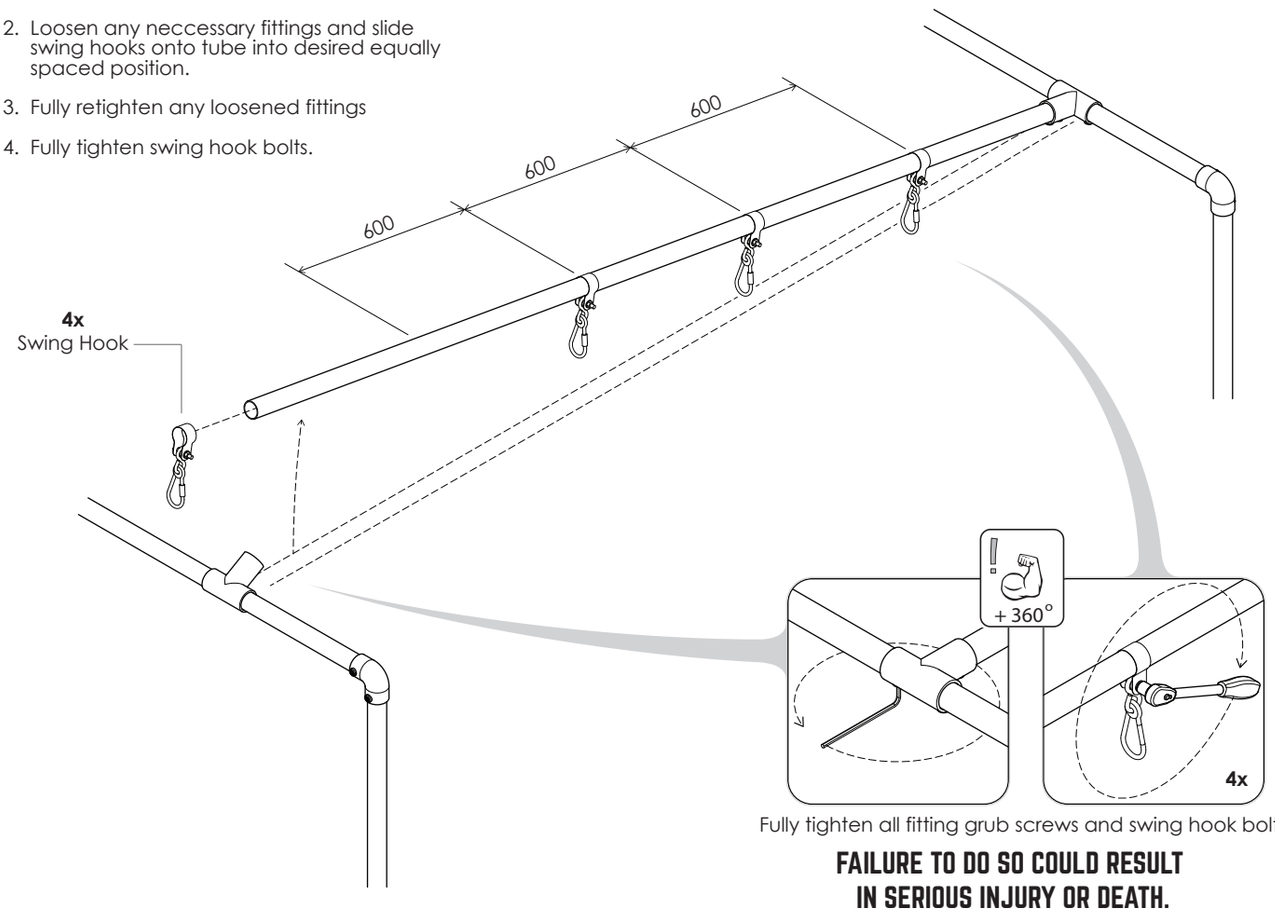

Fully tighten all fitting grub screws and swing hook bolts.

FAILURE TO DO SO COULD RESULT IN SERIOUS INJURY OR DEATH.

3 ASSEMBLE DELTA RINGS

1. Fasten D - shackle onto delta ring top.
2. Open carabiner shackle and attach D - shackle then hanging strap.
3. Repeat this 3 more times.

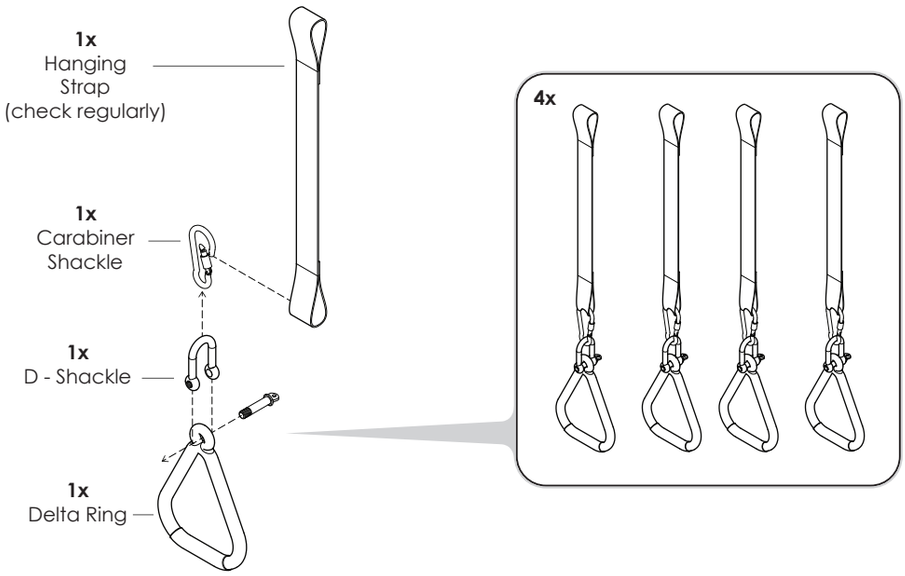

4 ATTACH DELTA RINGS

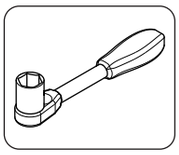

1. Ensure swing hook bolts are fully tightened. Failure to do so can result in **serious injury.**
2. Slot hanging strap into opened swing hook shackle.
3. Ensure shackle is fully closed. Mind your fingers!

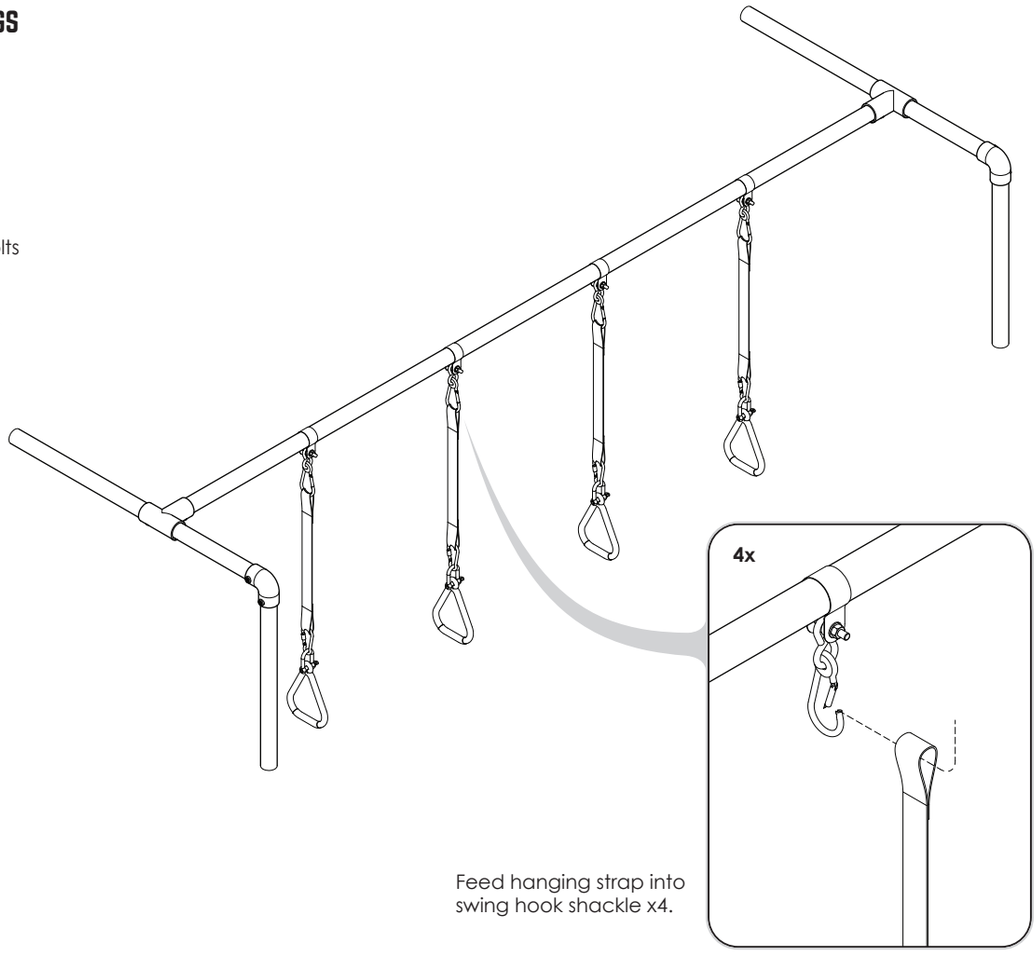

Feed hanging strap into swing hook shackle x4.

5 FINAL CHECKS

1. Ensure all swing hook bolts are firmly tightened.
2. Check that all other grub screws and rung bolts on your frame are fully tightened.
3. The entire Funky Monkey Bars® frame is pegged down.

NOTE: When Ninja grips are NOT in use, bring indoors to prolong life of this product. Please refer to the additional maintenance steps at the back of the booklet.

1 CHECK INVENTORY - (NOT TO SCALE)

Check that you have the following items before assembling your Funky Monkey Bars® Resistance Bands.

FITTINGS, HARDWARE & TUBES

2x
Plastic End Cap

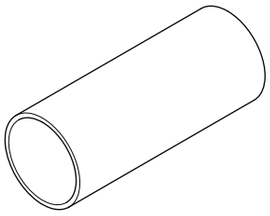

2x
Band Tube
50Dia. x 120mm

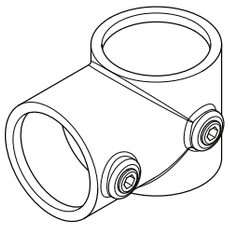

2x
Short Tee
D-101

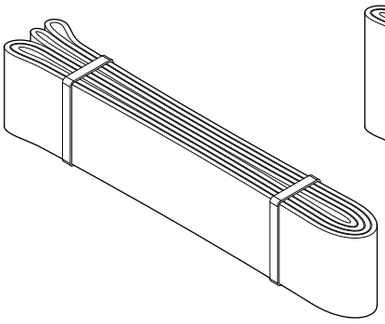

1x
Purple Resistance Band
1040mm Long x 45mm Wide
Strength: 22-57kg

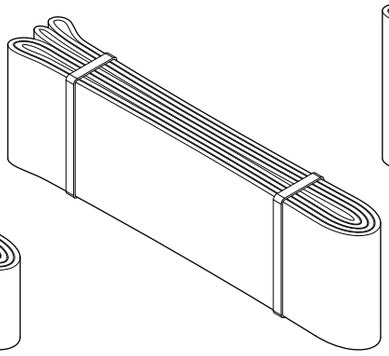

1x
Green Resistance Band
1040mm Long x 64mm Wide
Strength: 30-80kg

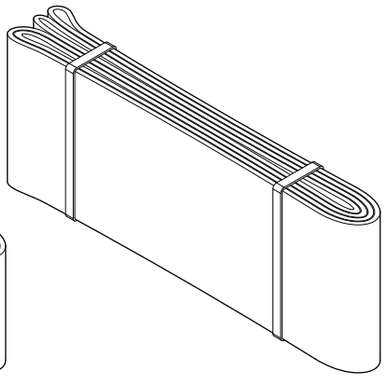

1x
Blue Resistance Band
1040mm Long x 83mm Wide
Strength: 36-105kg

2 SELECT DESIRED LOCATION OF RESISTANCE BAND ADD-ON

The resistance band add-on kit requires a pull up bar or gym bar for installation.

Your gym bar may be attached to an adjustable leg tube 'A' (shown) or a swing leg.

Select height for resistance bands.

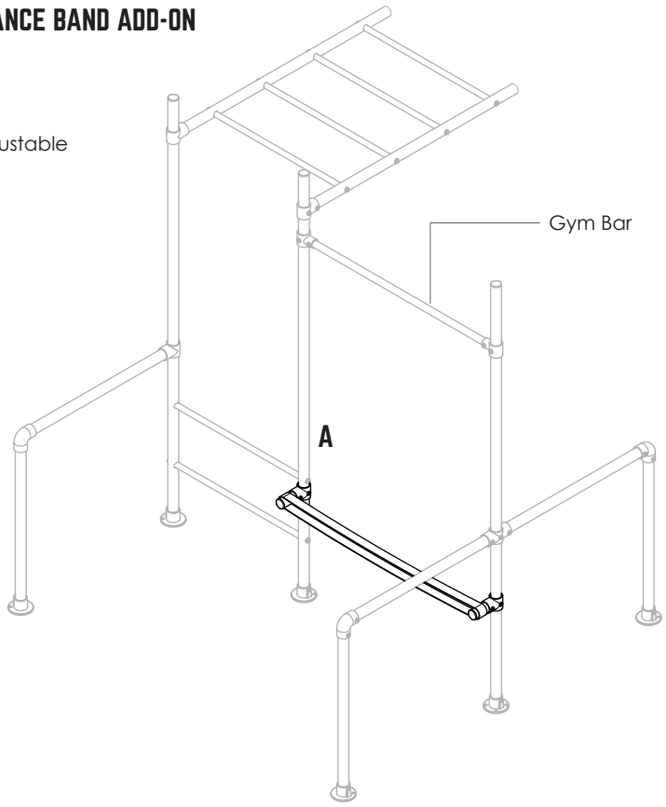

3 ASSEMBLE RESISTANCE BAND SUPPORTS

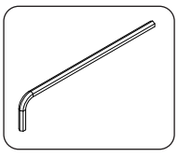

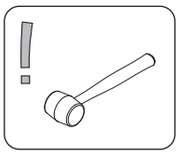

1. Tap plastic end caps into band tubes.
2. Insert tubes into short tees and tighten grub screws.

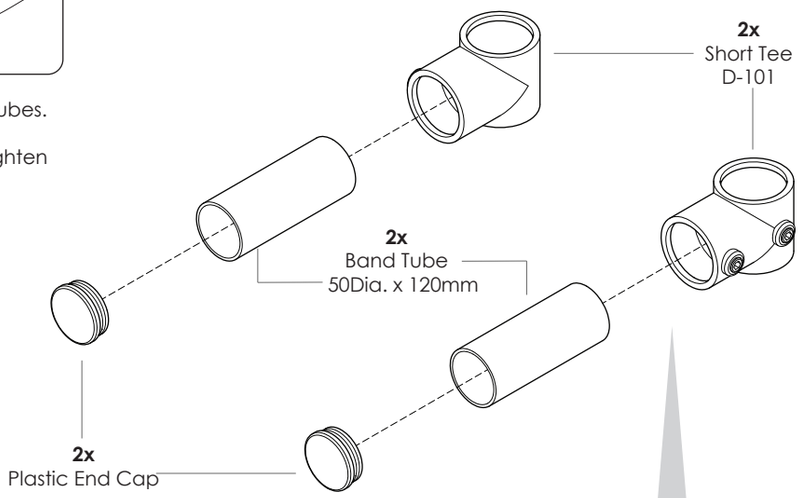

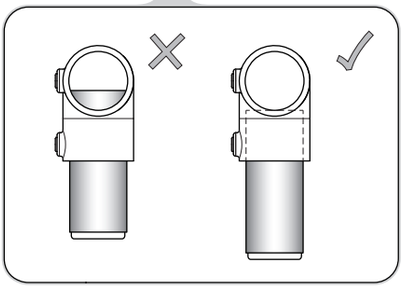

Insert Band Tube flush with through hole.

4 PREPARE FRAME FOR INSTALLATION

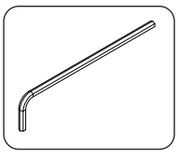

1. If your gym bar is already installed you will need to remove a number of fittings in order to fit the band supports. In most cases it will be easier to install from the base, upwards.
2. Remove any pegs, bolts and fittings required to install your resistance band supports.

Remove pegs.

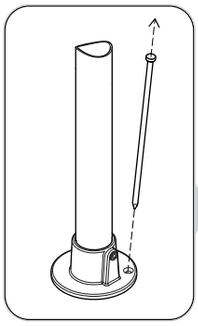

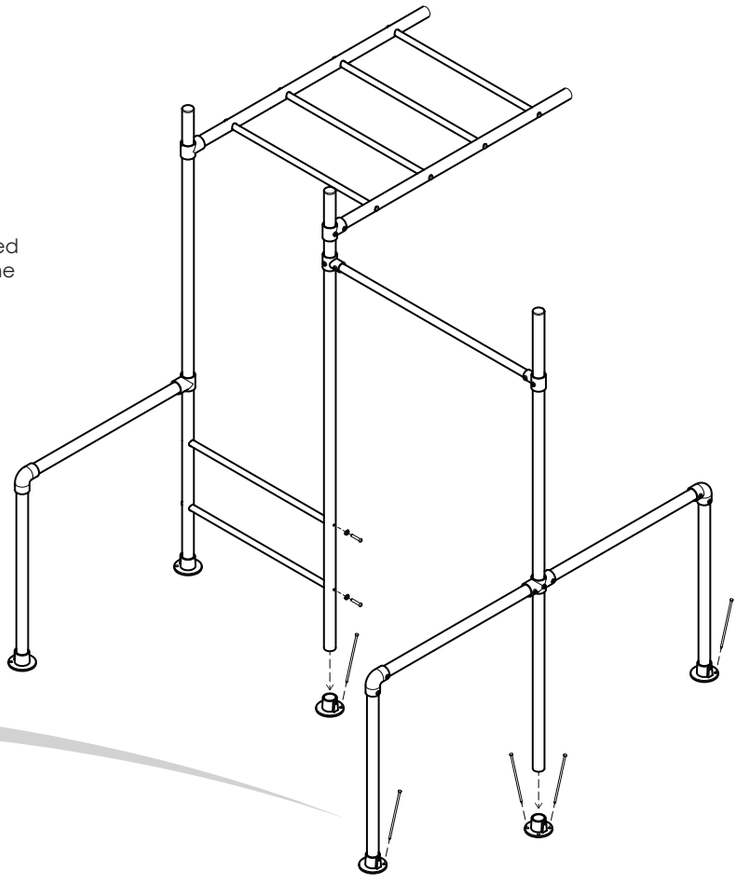

5 INSTALL RESISTANCE BAND SUPPORTS

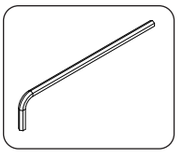

1. Slide resistance band supports from leg bases upwards into desired position.

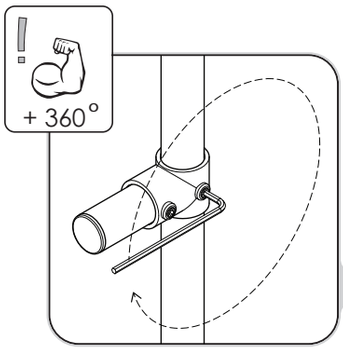

2. Fully tighten all grub screws.

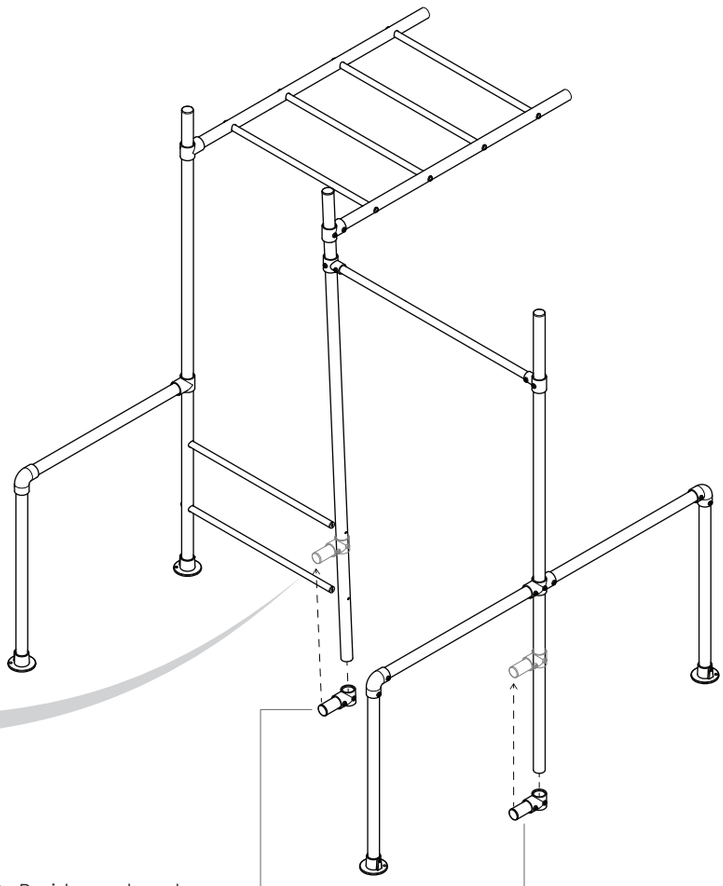

2x Resistance band supports from step 3

6 RE-ASSEMBLE FRAME

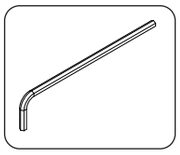

1. Replace any removed base plates pegs bolts and fittings.
2. To reduce movement in your frame load your twirly whirly bars as per original frame assembly instructions or refer to website at www.funkymonkeybars.com/pages/videos

Hammer in pegs.

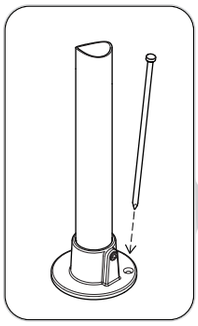

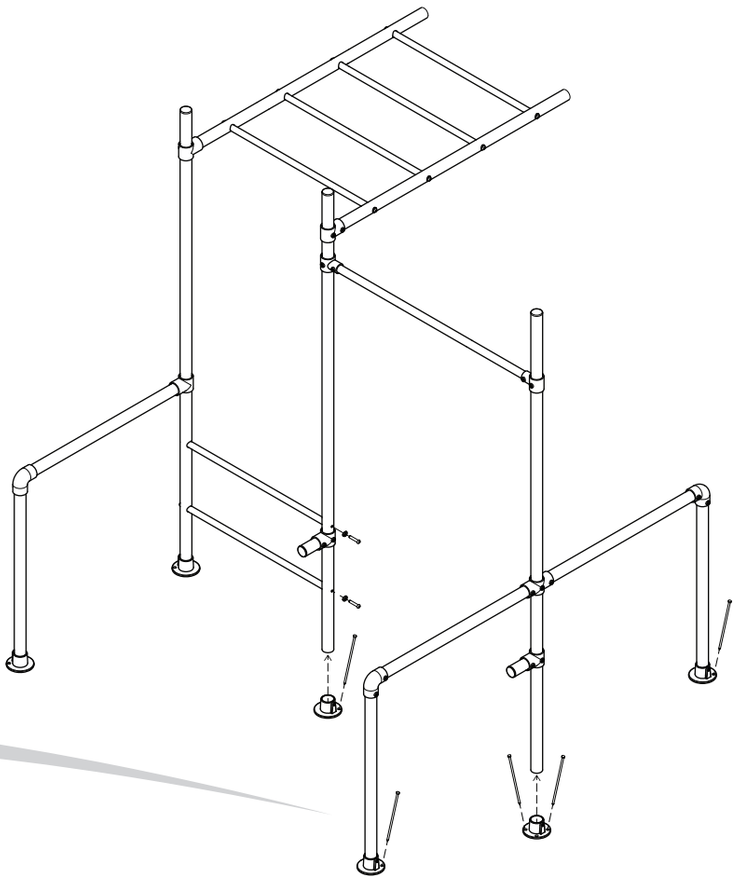

7 ATTACH RESISTANCE BANDS

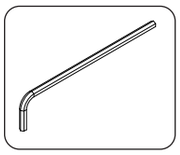

Stretch single or combinations of the resistance bands around each end of the short support tubes to give the desired resistance.

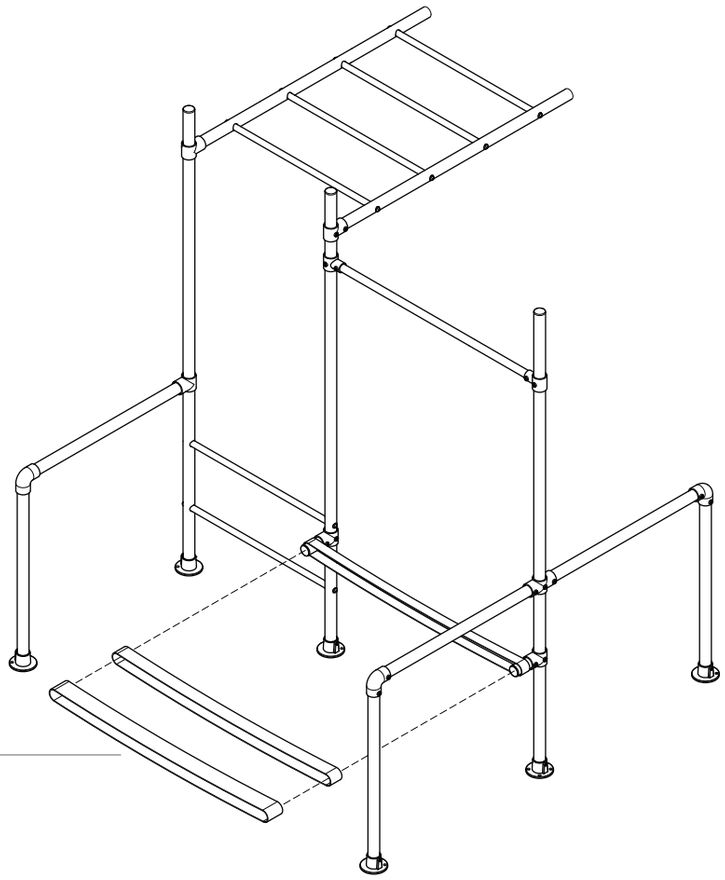

3x
Resistance Bands

Purple Band 45mm Wide - Strength: 22-57kg
Green Band 64mm Wide - Strength: 30-80kg
Blue Band 83mm Wide - Strength: 36-105kg

9 FINAL CHECKS

1. Check that all grub screws and bolts on your frame are fully tightened.
2. The entire Funky Monkey Bars® frame is pegged down.
3. Load Twirly Whirly bars - see frame assembly instructions or website http://www.funkymonkeybars.com/pages/videos

NOTE: When Resistance bands are NOT in use, bring indoors to prolong life of this product.
Please refer to the additional maintenance steps at the back of the booklet.

1 CHECK INVENTORY - (NOT TO SCALE)

Check that you have the following items before assembling your Funky Monkey Bars® Weight Bar Holders.

FITTINGS, HARDWARE & TUBES

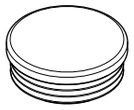

2x
Plastic End Cap

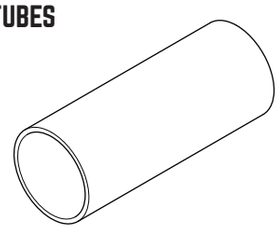

4x
Band Tube
50Dia. x 120mm

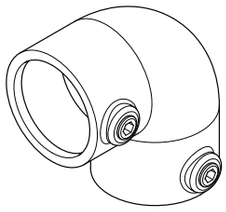

2x
Elbow
D-125

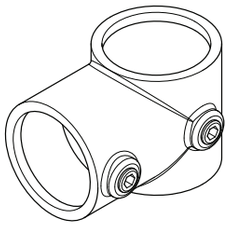

2x
Short Tee
D-101

2 SELECT DESIRED LOCATION OF WEIGHT BAR HOLDERS

The weight bar holders can be placed anywhere there are two vertical tubes that have a space less than 120mm.

This could be between two adjustable legs or an adjustable leg and a swing leg.

Take into account if you are adding to an already assembled frame- fittings will need to be removed for installation.

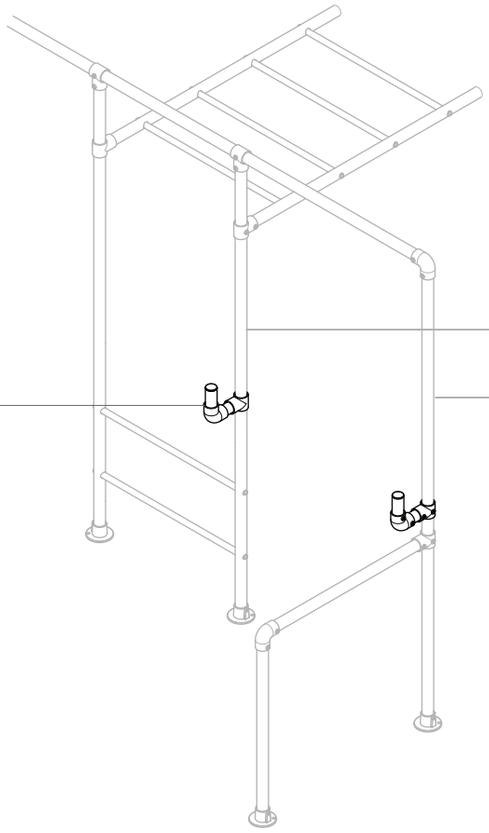

3 ASSEMBLE WEIGHT BAR HOLDERS

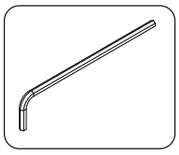

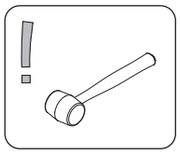

1. Tap plastic end caps into 2x 120mm tubes.
2. Insert all tubes into elbows and tighten grub screws.

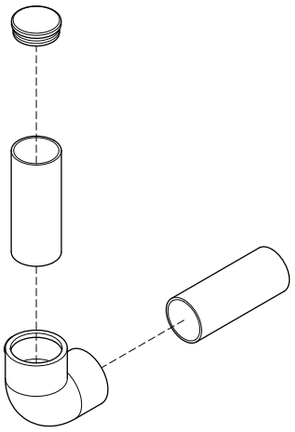

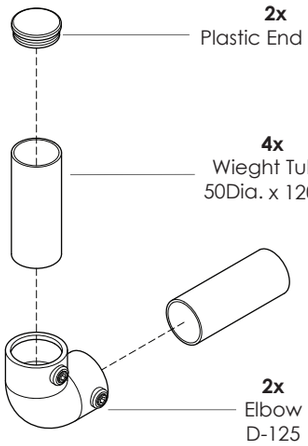

4 PREPARE FRAME FOR INSTALLATION

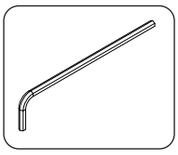

1. You will need to remove a number of fittings in order to fit the weight holders. In most cases it will be easier to install from the top, downwards.

2. Remove top swing bar and loosen all grub screws on short tee A.

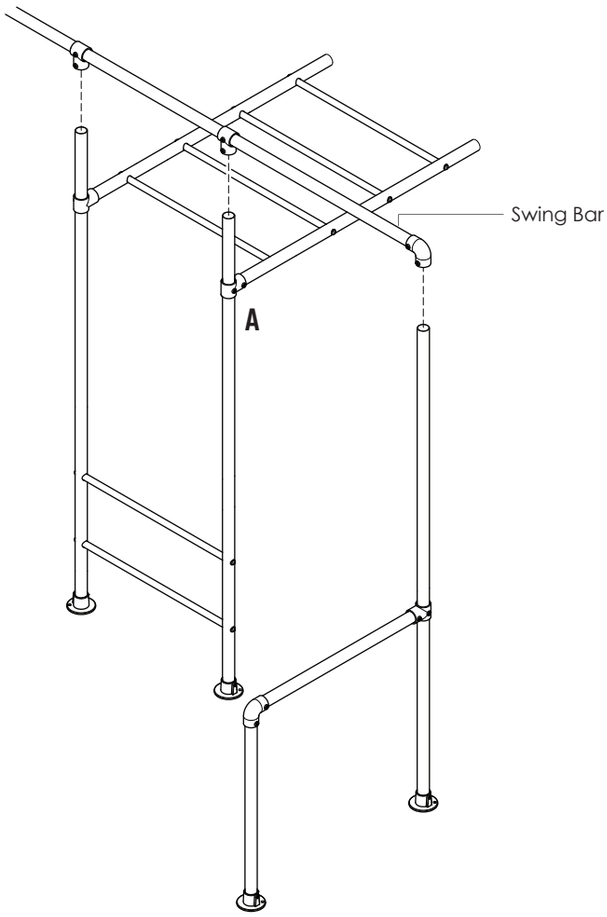

5 ATTACH SHORT TEES

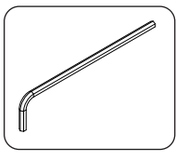

1. Slide short tee 'A' down to desired weight holder height. Replaced lowered 'A' short tee with new short tee 'B'

2. Slide on short tee 'C' to same height as desired weight holder position.

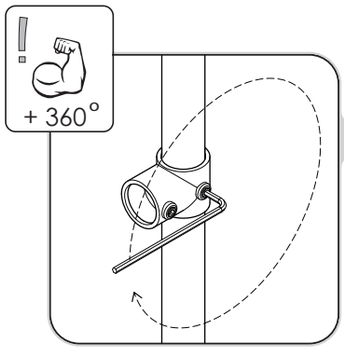

3. Fully tighten all grub screws.

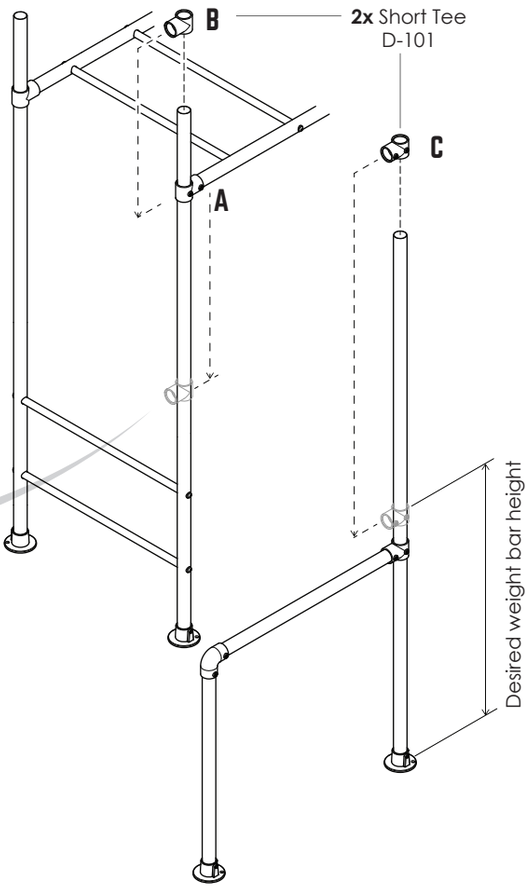

6 RE-ASSEMBLE FRAME

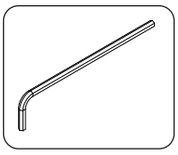

1. Re-attach any frame tubes and fittings that were removed to enable adding 2x short tees. (In the shown example - replace swing bar)

2. Fully tighten all grub screws.

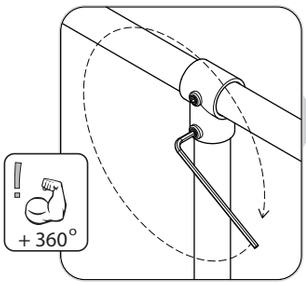

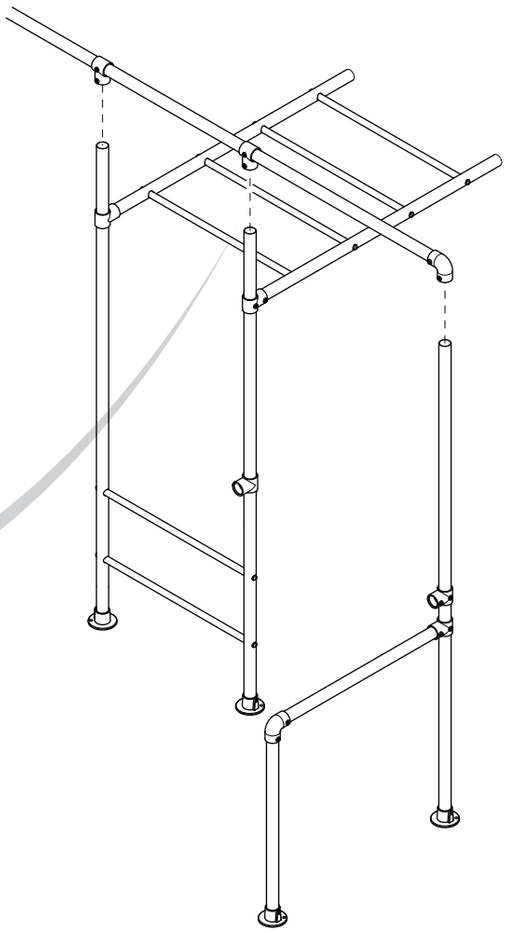

7 ATTACH WEIGHT BAR HOLDERS

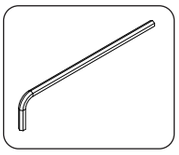

1. Insert 2x weight bar holders preassembled in step 3.

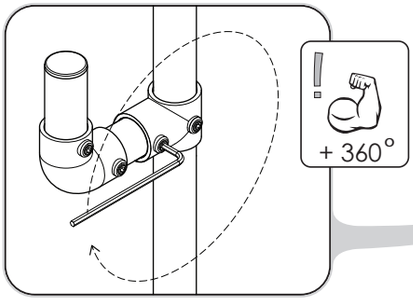

2. Fully tighten all grub screws.

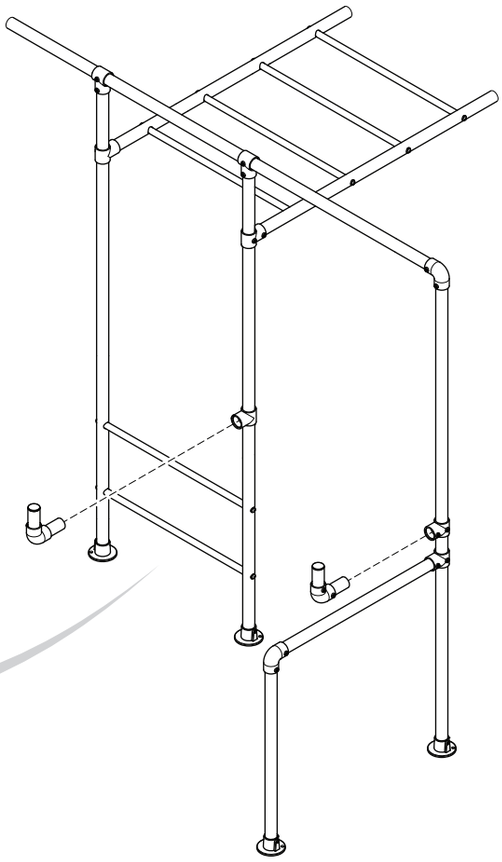

6 ADD WEIGHT BAR - (NOT INCLUDED)

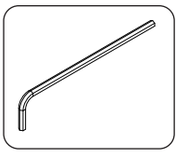

The weight bar holder can now be used for a variety of weight lifting exercises.

NOTE: Adjust the height of the weight bar holder with the weights removed.

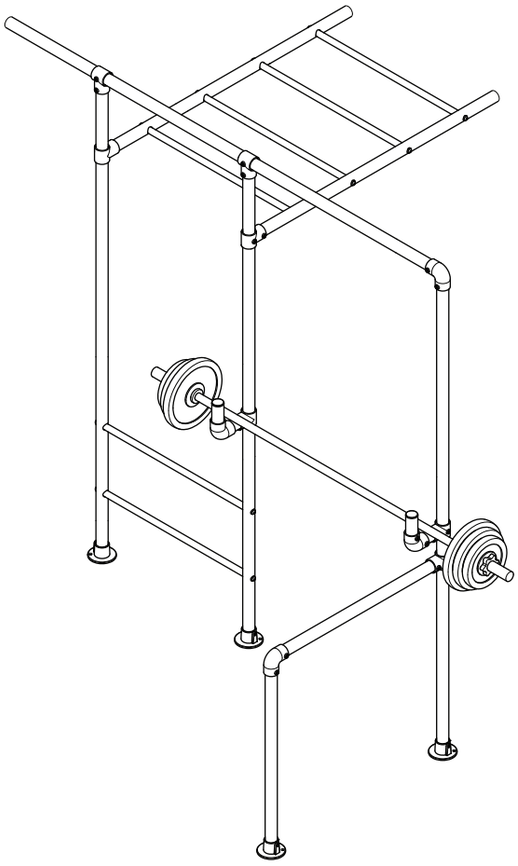

7 FINAL CHECKS

1. Check that all grub screws and bolts on your frame are fully tightened.
2. The entire Funky Monkey Bars® frame is pegged down.

NOTE: When your weights are NOT in use, please remove for safety, reducing excessive loading and weathering. Please refer to the additional maintenance steps at the back of the booklet.

1 CHECK INVENTORY - (NOT TO SCALE)

Check that you have the following items before assembling your Funky Monkey Bars® Gym Bar.

FITTINGS & HARDWARE

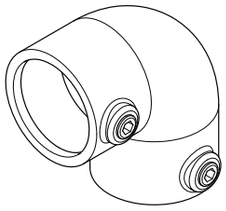

1x
Elbow
D-125

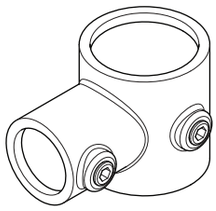

2x
Reducing Tee
D-101 D48-B34

1x
Plastic End Cap

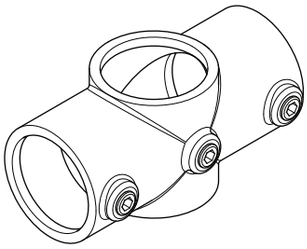

1x
Straight Through
D-119

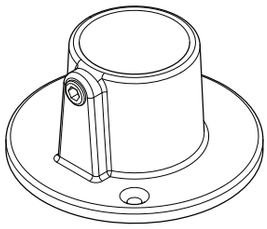

1x
Base Plate
D-131

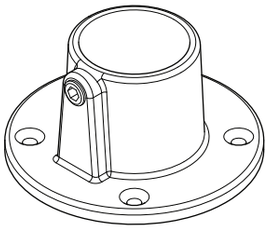

1x
Base Plate
D-131-4 Hole

5x
Peg

TUBES

2x
Twirly Tube

50Dia. x 900mm

1x
Chin up Tube

33Dia. x 1150mm

1x
Gym Leg Tube

50Dia. x 2300mm

2 SELECT DESIRED LOCATION OF GYM BAR (CHIN UP BAR)

(Assembly options shown on Chimp frame)

The Gym bar add-on accessory can be attached to any of the 4 outside poles A-D. This could be a swing leg or adjustable leg.

In either case a twirly whirly must be removed from the selected leg and added to the gym bar set-up.

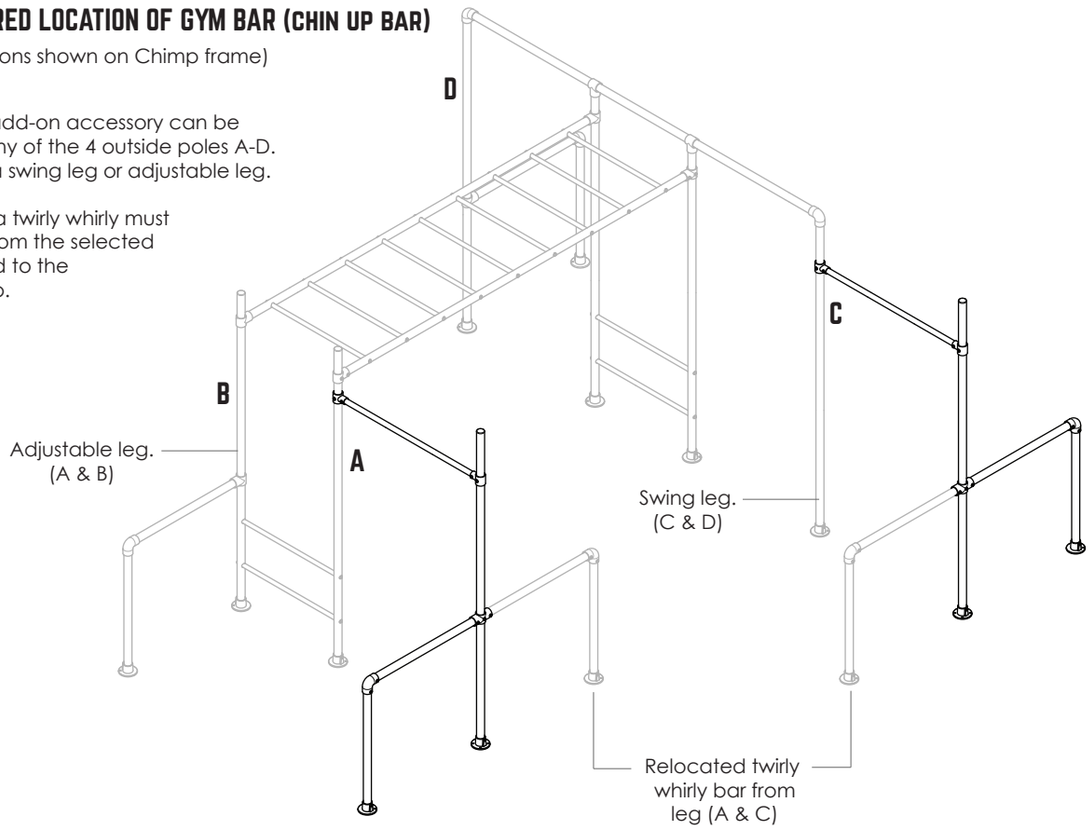

THE FOLLOWING GYM BAR ADD-ON ASSEMBLY INSTRUCTIONS WILL BE DEMONSTRATED ON LEG A (STEP 2)

Installation on a swing leg (D or C -step 2) also involves removing the twirly whirly bar, but requires the top elbow to be removed rather than the monkey ladder bar short tee.

3 REMOVE TWIRLY WHIRLY BAR - PREPARATION

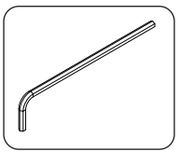

1. Loosen all grub screws on short tees A & B
2. Remove peg from twirly whirly base plate on leg where gym bar is to be installed.

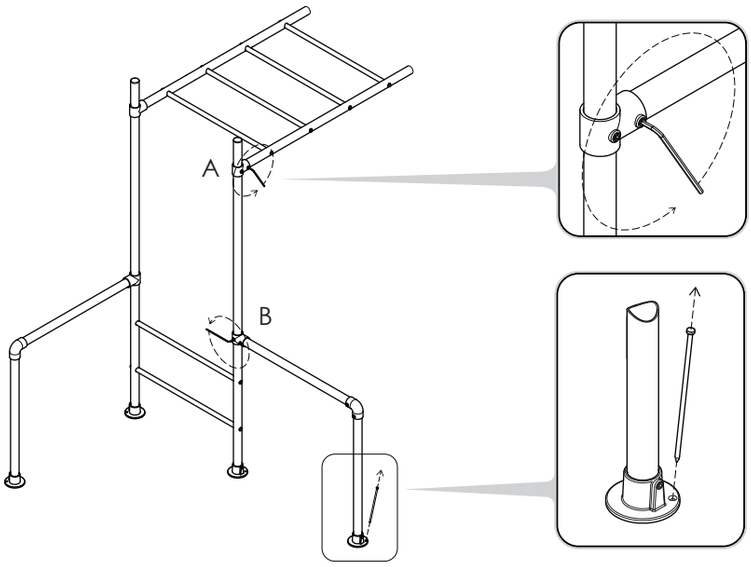

4 REMOVE TWIRLY WHIRLY BAR

Remove twirly whirly from leg and place to one side for later re-installation.

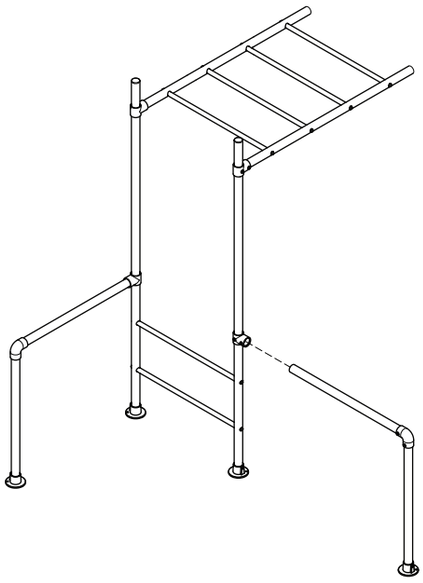

5 REMOVE SHORT TEES

Pull leg away from ladder and remove both short tees A & B.

Keep to side for later re-installation.

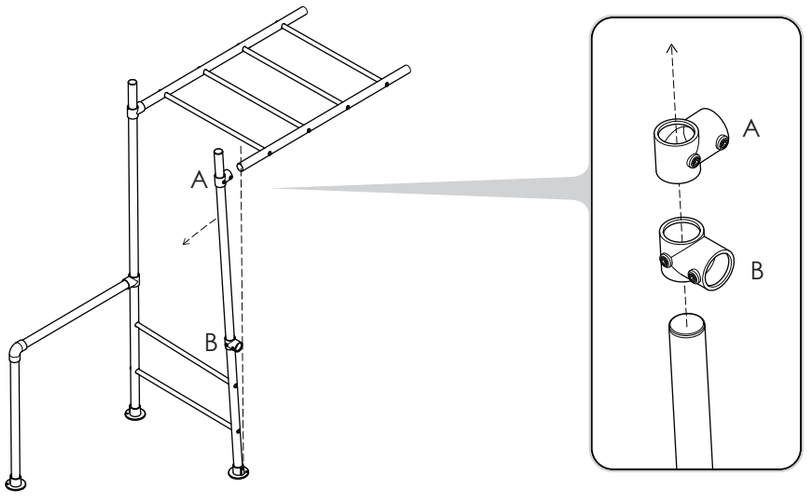

6 SLIDE ON SHORT TEE & REDUCING TEE

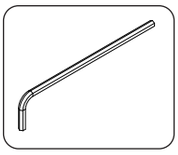

Depending on desired height of Chin up tube replace removed short tees from step 5 with 1x reducing tee and reuse 1x short tee.

C could be above A if gym bar selected height is above the monkey bar ladder.

Fully tighten all grub screws.

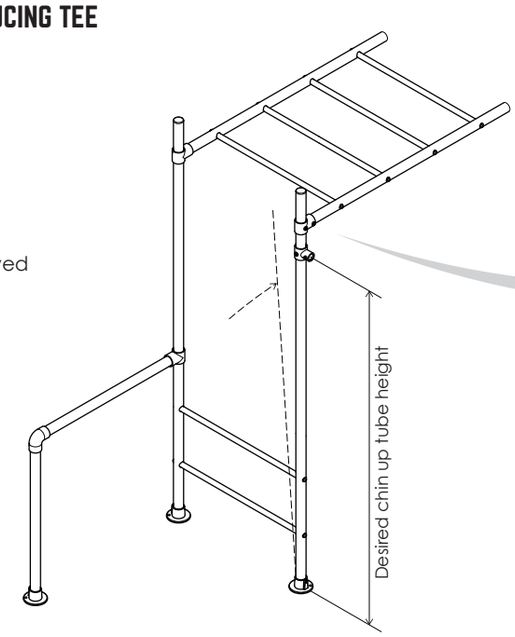

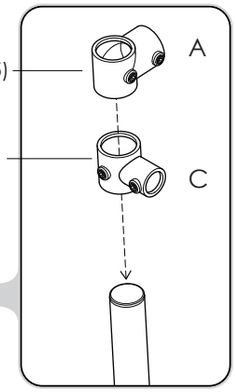

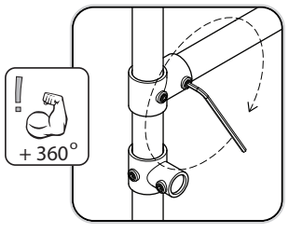

Fully tighten all grub screws.

IF ATTACHING THE GYM BAR ADD-ON TO SWING LEG C OR D (STEP 2) REMOVE TOP ELBOW AND TWIRLY WHIRLY THEN SLIDE ON REDUCING TEE AND REATTACH TOP ELBOW USING A SIMILAR PROCEEDURE TO STEPS 3-6

7 ASSEMBLE GYM BAR

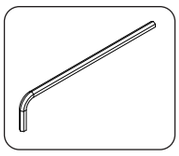

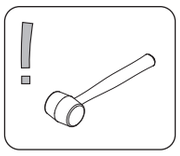

On flat level ground slide fittings onto gym leg tube. Ensure reducing tee is same height as on main frame, then fully insert chin up tube. Tap in end cap Fully tighten all grub screws.

Ensure 4 hole base plate.

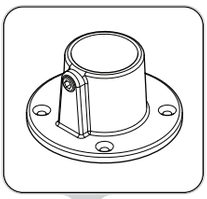

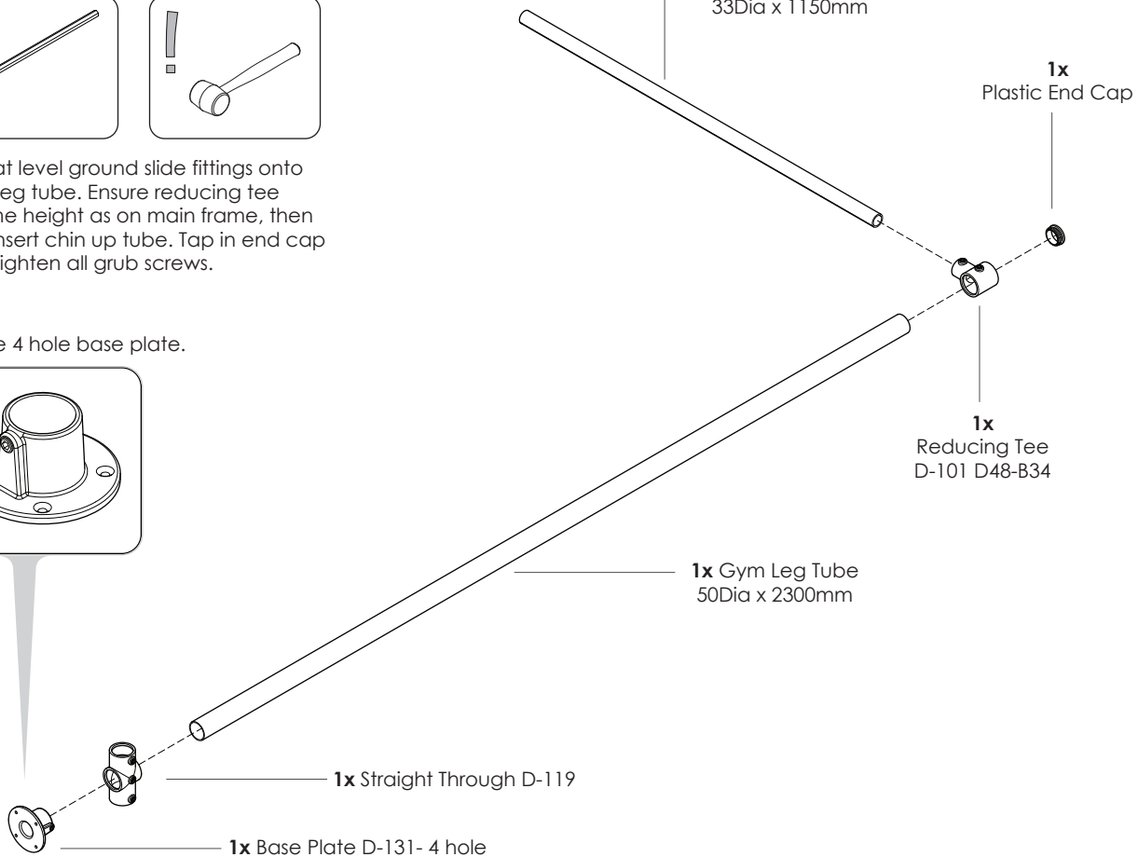

8 ASSEMBLE VERTICAL TWIRLY TUBE

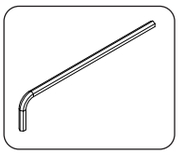

1. Fully insert twirly whirly tube into elbow and base plate.
2. Fully tighten all grub screws.

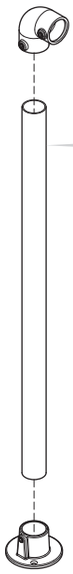

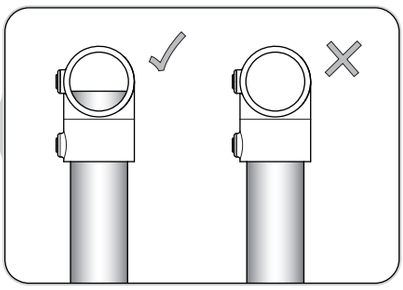

Insert Twirly Tube fully into Elbow.

9 ATTACH HORIZONTAL TWIRLY TUBE

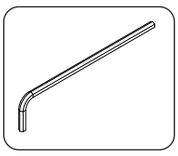

Fully insert twirly tube then firmly tighten all grub screws.

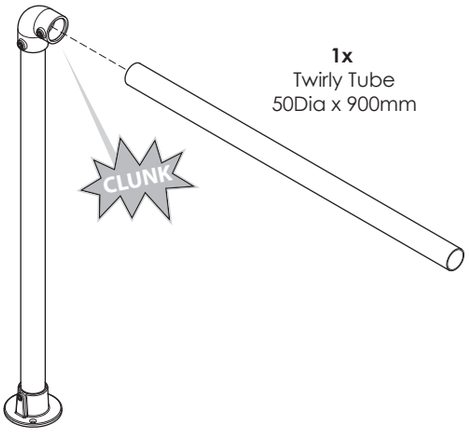

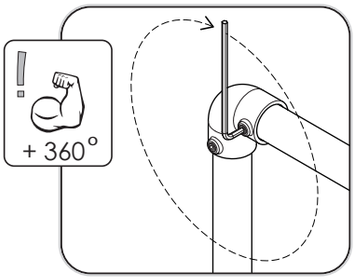

10 ATTACH GYM BAR (CHIN UP BAR)

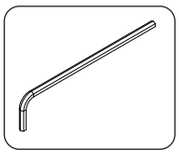

Insert gym bar tube into the reducing tee on the adjustable leg. Ensure gym bar is level and fully tighten all grub screws.

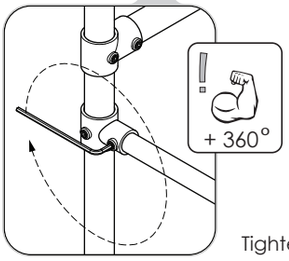

Tighten all grub screws.

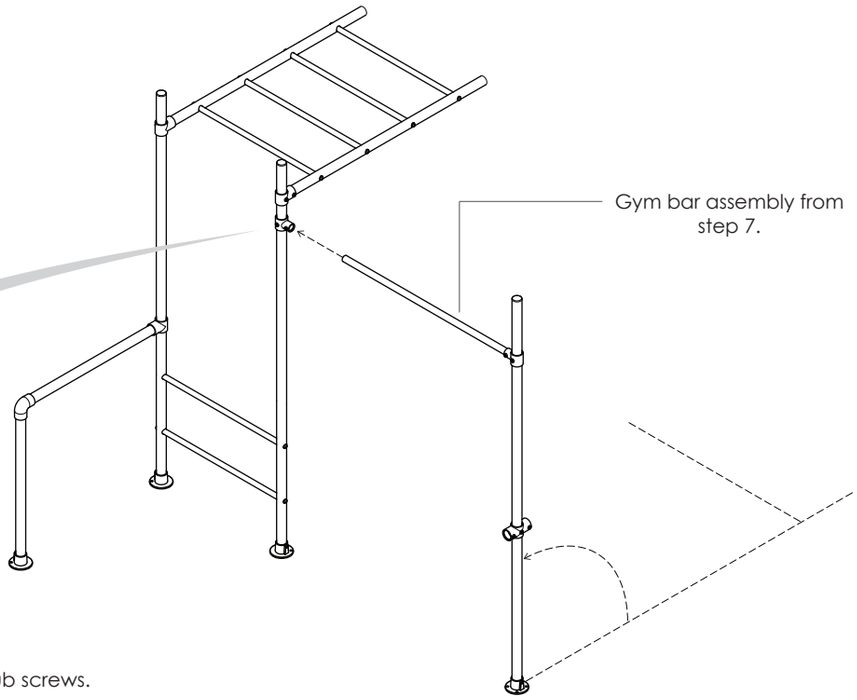

11 ATTACH TWIRLY WHIRLY BARS x2

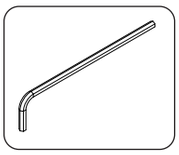

1. Adjust straight through fitting to align level with twirly whirly bars. Reuse twirly whirly removed in step 4 & newly assembled one from step 9.
2. Tighten all grub screws fixing twirly whirlys to legs.

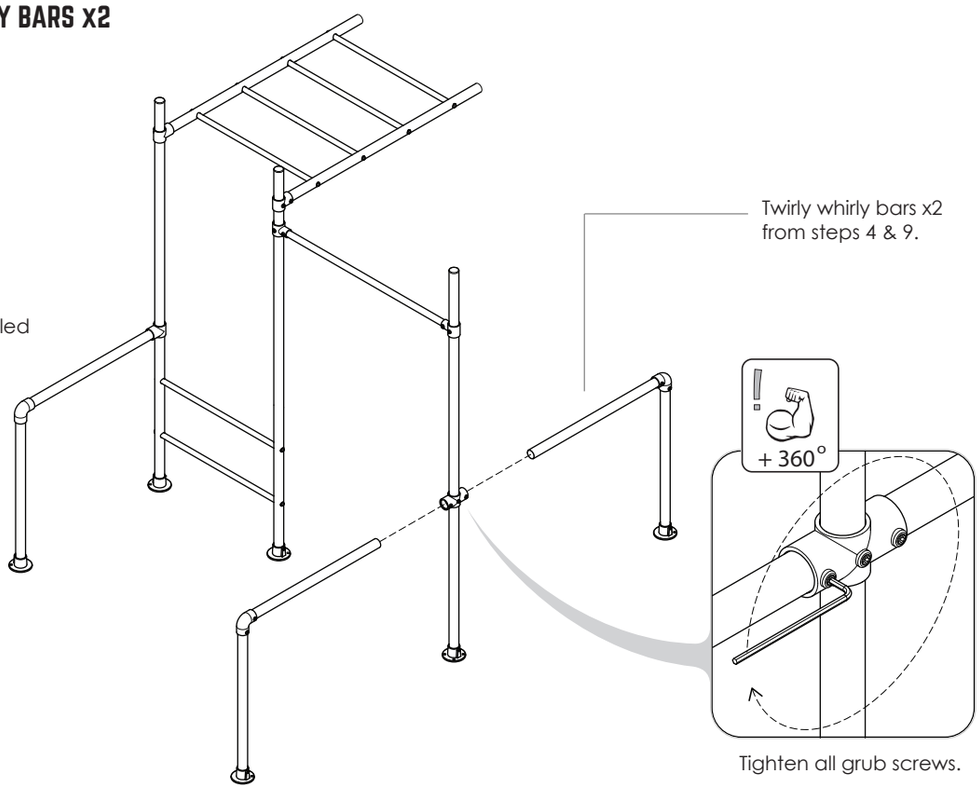

Tighten all grub screws.

12 SECURE TO GROUND

1. Check level and square - Loosen and adjust if not.
2. Hammer in pegs 6x.
3. Check all fixings are fully tight.

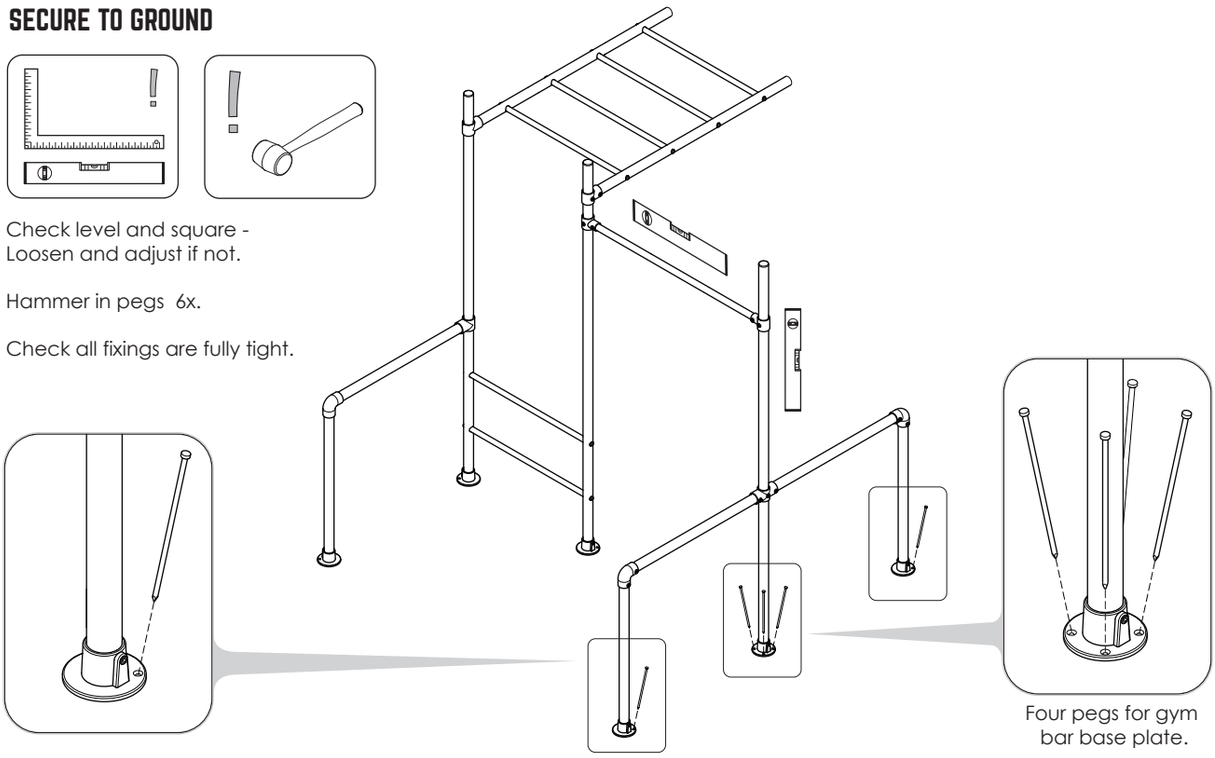

Four pegs for gym bar base plate.

13 FINAL CHECKS

1. Ensure all swing hook bolts are firmly tightened.
2. Check that all other grub screws and rung bolts on your frame are fully tightened.
3. The entire Funky Monkey Bars® frame is pegged down.
4. Load Twirly Whirly bars - see frame assembly instructions or website http://www.funkymonkeybars.com/pages/videos

Please refer to the maintenance steps at the back of the booklet.

1 CHECK INVENTORY - (NOT TO SCALE)

Check that you have the following items before assembling your Funky Monkey Bars® Dip Bar Add-on.

FITTINGS & HARDWARE

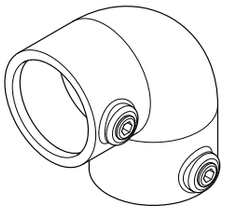

3x
Elbow
D-125

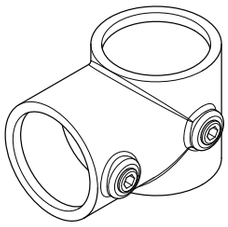

5x
Short Tee
D-101

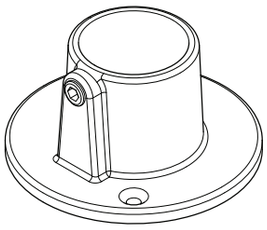

3x
Base Plate
D-131

3x
Peg

TUBES

2x
Brace Tube

50Dia. x 450mm

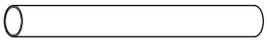

3x
Dip Vertical Tube

50Dia. x 1085mm

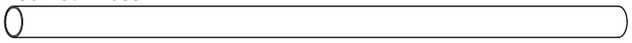

2x
Dip Horizontal
Black Tube

50Dia. x 1085mm

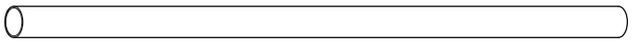

2 SELECT DESIRED LOCATION OF DIP BAR

(Assembly options shown on Chimp frame)

The Dip bar add-on accessory can be attached to any of the 4 outside poles- A-D. This could be a swing leg or adjustable leg. It can also be positioned parallel or perpendicular to the frame.

In either case a twirly whirly must be removed from the selected leg.

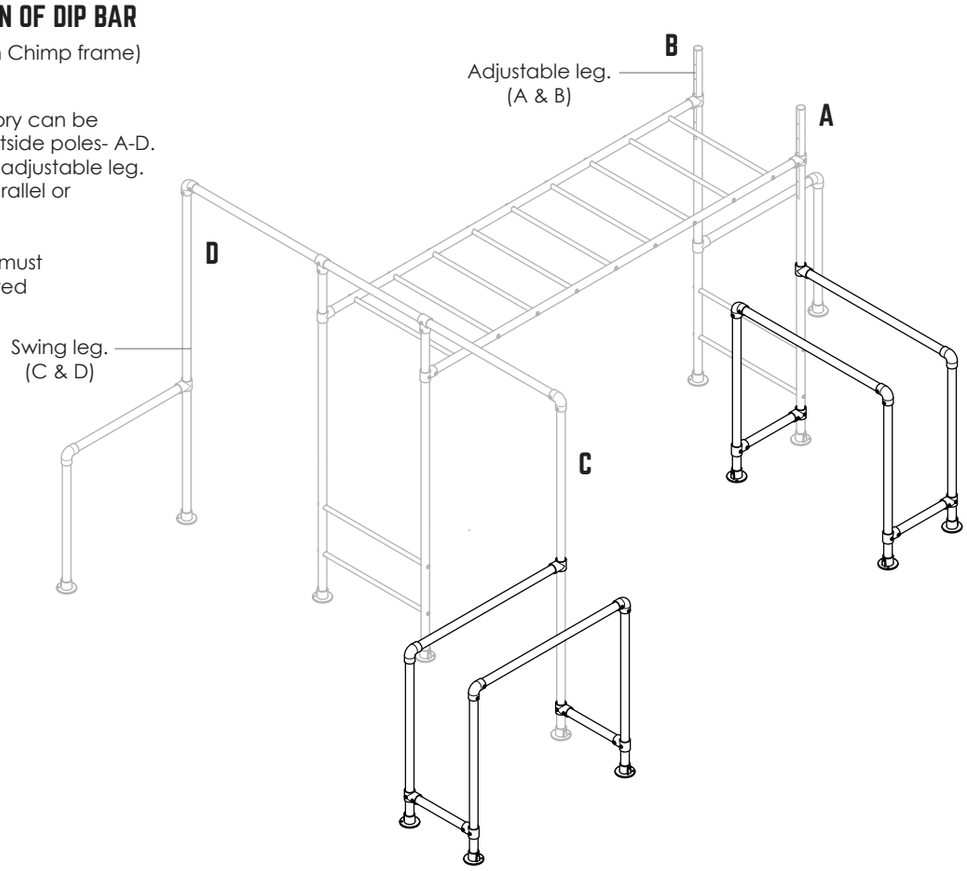

THE FOLLOWING DIP BAR ADD-ON ASSEMBLY INSTRUCTIONS WILL BE DEMONSTRATED ON LEG A (STEP 2)

Installation on a swing leg (C or D -step 2) also involves removing the twirly whirly bar and the lower base plate.

3 EXISTING FRAME - PREPARATION

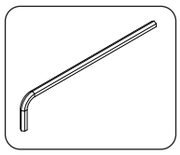

1. Loosen all grub screws on short tee A & base plate B
2. Remove pegs from twirly whirly base plate & on leg where dip bar is to be installed.

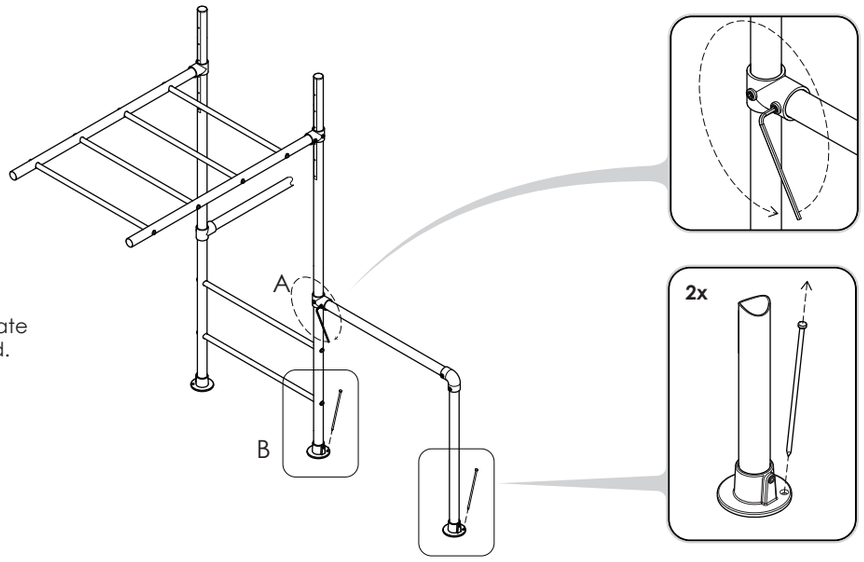

4 REMOVE TWIRLY WHIRLY BAR & LEG BASE PLATE

1. Remove twirly whirly from leg and place to one side.
2. Lift leg slightly and remove base plate temporarily.

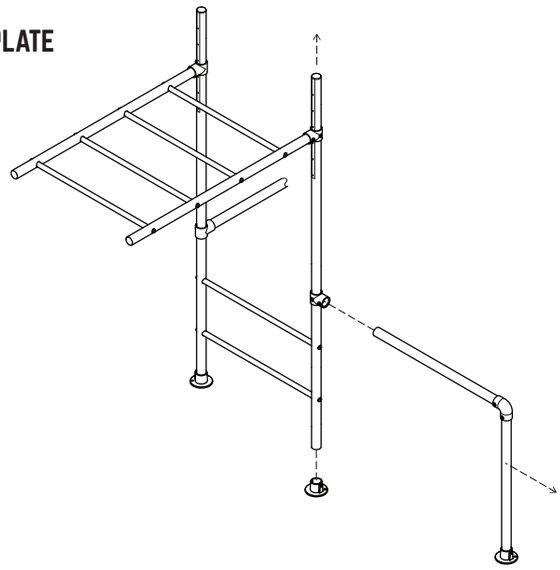

5 ATTACH SHORT TEE & REPLACE BASE PLATE

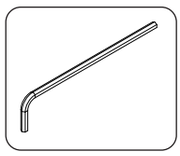

With leg still lifted, slide on short tee 'C' and reattach base plate.

Hand tighten short tee half way between leg rung and base plate.

Fully tighten grub screw on base plate.

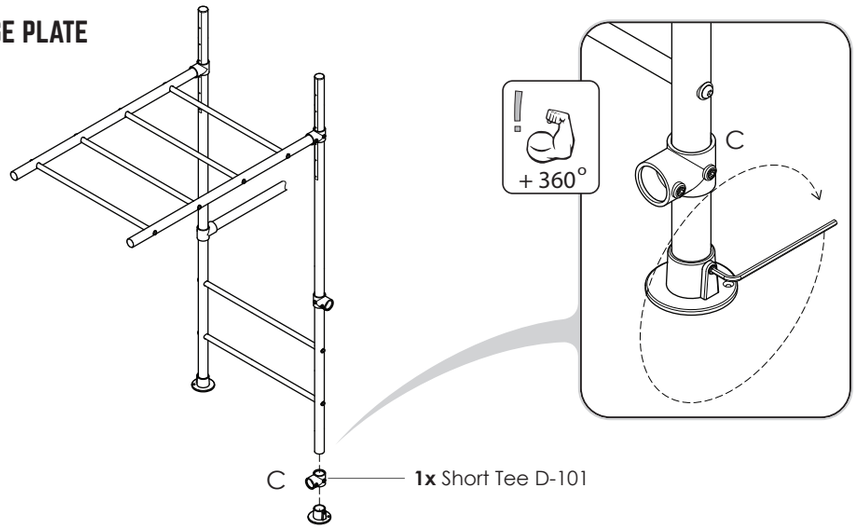

6 ASSEMBLE DIP STATION LEGS

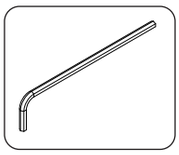

1. Fit short tees at same height as leg short tee (C) in step 5.
2. Fully insert elbows and base plates, then fully tighten all grub screws.

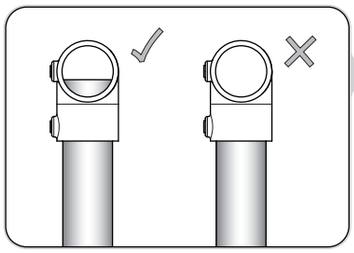

Insert dip vertical tube (silver) fully into elbow.

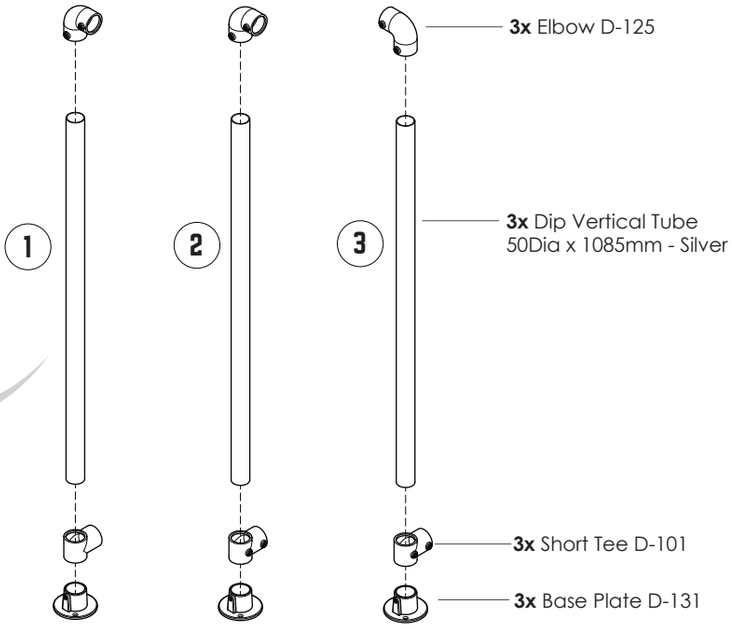

7 ATTACH DIP STATION LEG 1 & DIP BAR

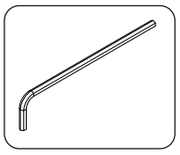

1. Adjust height of short tee on leg & insert dip tube.
2. Attach dip station leg.
3. Check it is level and square. Fully tighten all grub screws.

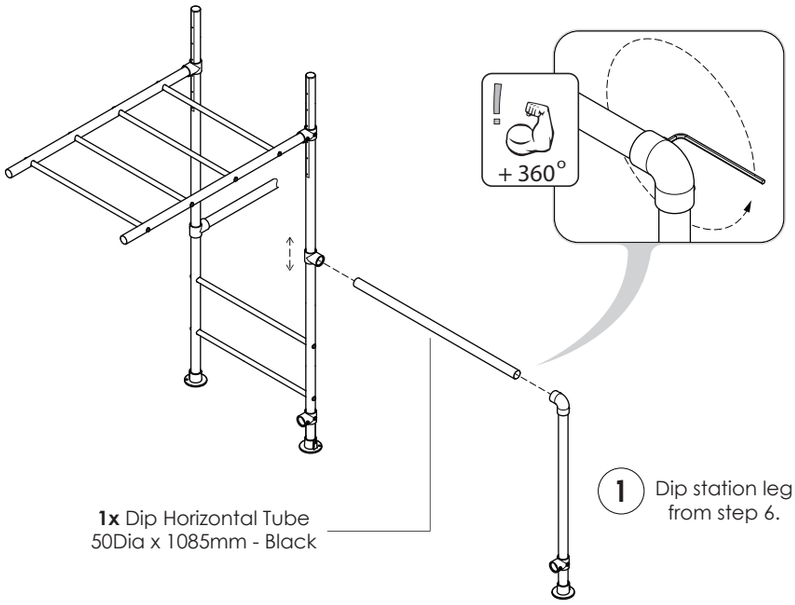

8 ASSEMBLE OTHER DIP STATION SIDE

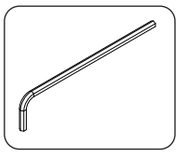

On flat level ground insert brace and black dip tubes into dip station legs 2&3.

Firmly tighten all grub screws.

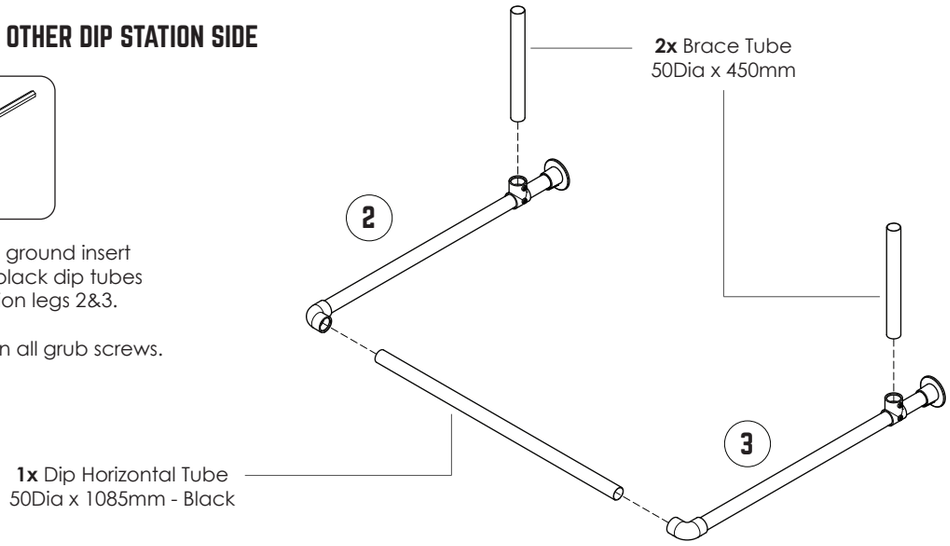

9 ATTACH OTHER DIP STATION SIDE

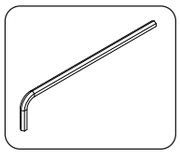

Insert brace tubes into short tees and fully tighten all grub screws on dip station.

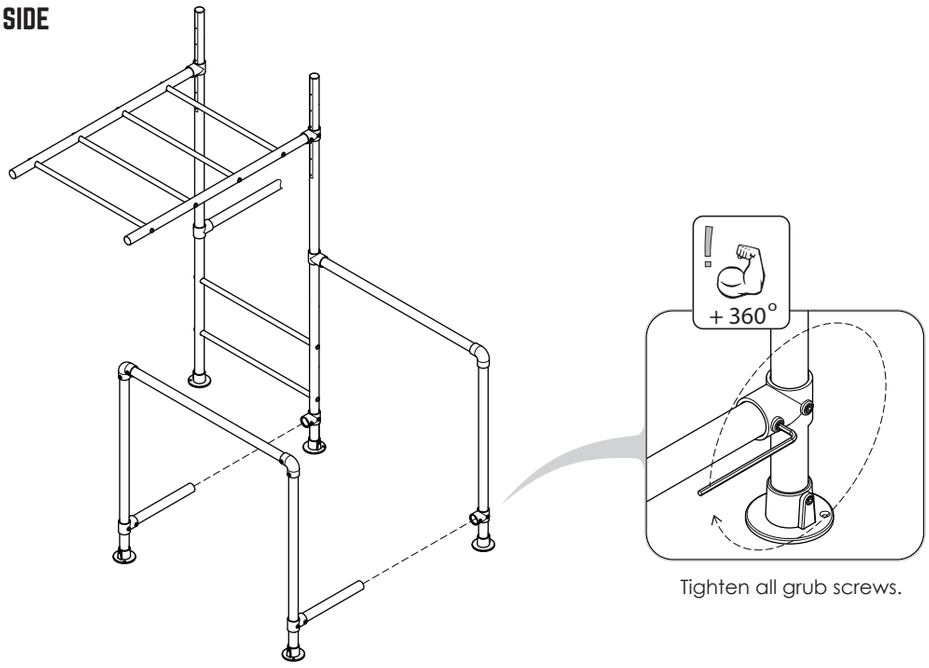

Tighten all grub screws.

10 SECURE TO GROUND

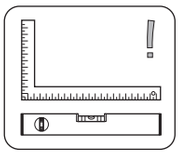

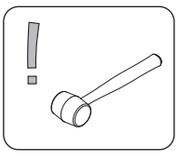

1. Check level and square - Loosen and adjust if not.
2. Hammer in pegs 4x.
3. Check all fixings are fully tight.

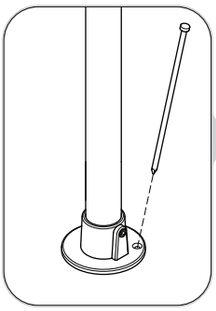

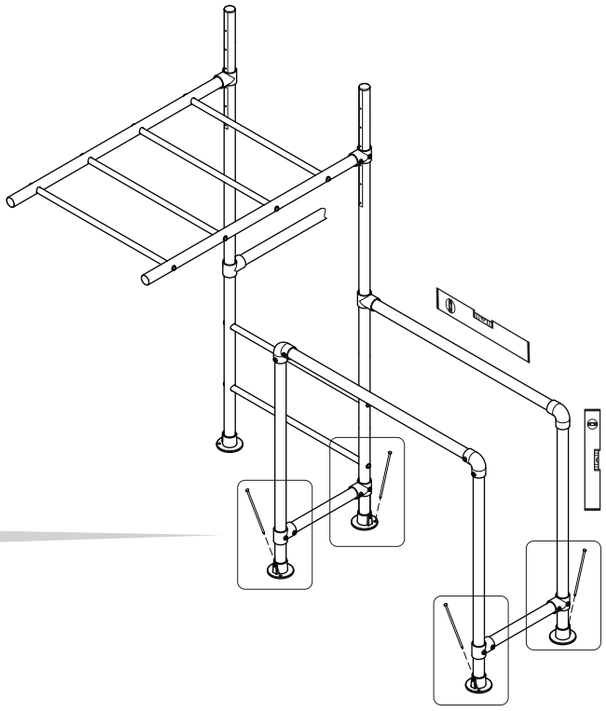

11 FINAL CHECKS

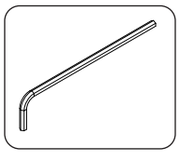

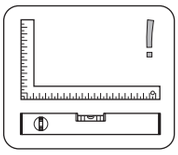

1. Ensure frame is square and level.
2. Firmly tighten all grub screws and bolts.
3. All base plates are pegged down.

Please refer to the maintenance steps at the back of the booklet.

MAINTENANCE.

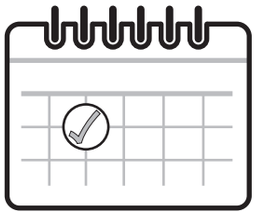

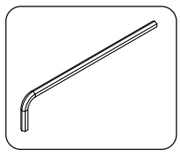

At the beginning of each heavy play session (especially a party) and twice a month during play season ensure;

1. Tighten all hardware - grub screws, nuts and bolts.
2. Pegs are in place and fully secure.
3. Lubricate all metallic moving parts with WD40 or Vasaline - (trolley and swing hooks.)
4. Ensure your frame is level and square.

FAILURE TO DO SO COULD RESULT IN SERIOUS INJURY OR DEATH.

FOR MORE INFORMATION AND ASSEMBLY TIPS PLEASE REFER TO OUR WEBSITE VIDEO INSTRUCTION SECTION AT HTTP://WWW.FUNKYMONKEYBARS.COM/PAGES/VIDEOS

HAVE FUN

FUNKY Monkey bars®

ABN 72 164 496 520
1300 912 198
info@**funkymonkeybars**.com
www.**funkymonkeybars**.com
9 Cutting Way,
Yangebup WA 6164

WE ARE SOCIAL MONKEYS

AUSTRALIAN MADE AND OWNED

Australian Government
IP Australia

All Funky Monkey Bars® designs are registered and protected under IP Australian certification.